MODEL:	REV:	CHANGE LIST:
ZH1 MotherBoard	1A	FIRST RELEASE
	2A	PAGE02. 1.MODIFY BSEL0 & BSEL1 2.ADD PCIE CLOCK FOR SATA PAGE03. 1.UN-STUFF R218 PAGE05. 1.MODIFY BSEL0 & BSEL1 2. REMOVE M_OCDCOMP RESISTOR (Intel Errta) PAGE06. 1.MODIFY SDVO I2C BUS PULL HIGH TO 5.6K PAGE08. 1.MODIFY CAPACITOR P/N DUE TO ME ISSUE PAGE09. 1.MODIFY SO-DIMM_SA0 & SA1 PAGE10. 1.MODIFY Q9,Q10 TO 2N7002 2. MODIFY RGB BEAD VALUE 3. DELETE SYNC BEFORE BUFFER RESISTOR 4. DELETE LCD_ON PULL DOWN RESISTOR 5.MODIFY LVDS CONNECTOR PAGE11. 1.MODIFY ICH-6 PULL HIGH RESISTOR VALUE 2. MODIFY Azalia LAYOUT TOPOLOGY 3.ADD SATA CIRCUIT 4. LAN_RST# CONNECT TO PLTRST# PAGE12. 1.MODIFY LAN POWER TO +1.5V & +3V (S3~S4 OFF) PAGE14. 1.MODIFY LAN RDAC TO 1.18K FOR IEEE TEST PAGE15. 1.MODIFY IDSEL RESISTOR TO 150 OHM PAGE16. 1.MODIFY 1394 POWER CLASS TO 30W 2.MODIFY CRYSTAL CL VALUE 3.ADD MOS FOR 1394 POWER PAGE17. 1.MODIFY IDSEL RESISTOR TO 150 OHM 2. MODIFY Azalia LAYOUT TOPOLOGY 3. MODIFY USB COMMON CHOKE FOOTPRINT & P/N PAGE18. 1.MODIFY Azalia LAYOUT TOPOLOGY 2. DELETE R458 3. ADD DIODE FOR HPS PAGE19. 1.MODIFY LED7,LED8 FOOTPRINT 2.ADD SATA INTERFACE HDD 3.REMOVE R465 , 6648_OV# USE PULL HIGH +3V PAGE20. 1.MODIFY IrDA C504 LOCATION PAGE21. 1.MODIFY KB MATRIX 2. ADD PME & MAX6648_AL# PAGE22. 1.MODIFY U18 FOOTPRINT PAGE23. 1.MODIFY PR116 FROM 787/F TO 1.54K/F FOR CPU LOAD LINE 2.MODIFY PQ41 FROM SUD50N03-09P TO AOD404 FOR CPU EFFICIENCY PAGE24. 1.REMOVE PQ2,PQ3,PR74 AND MOUNT PR57 FOR POWER SOURCE OF TURN ON MOSFET 2.ADD PR136,PR137,PC132,PC133 FOR EMI REQUEST PAGE25. 1.MODIFY PR78 NETNAME S5_ON CHANGE TO NETNAME SUSON 2.MODIFY PR80,PC89 FOR EMI REQUEST 3.MODIFY +VCCP POWER UP SEQUENCE PAGE26. 1.ADD PR138,PR139,PC134,PC135 FOR EMI REQUEST 2.REMOVE JP2,JP3 PAGE27. 1.REMOVE PC98 FOR ME REQUEST 2.MODIFY PR26 FROM 22K/F TO 12K/F FOR CONSTANT CURRENT LIMIT
	2B	PAGE 05. MODIFY NB P/N PAGE 06. MODIFY NB P/N PAGE 07. MODIFY NB P/N PAGE 08. MODIFY NB P/N PAGE 11. MODIFY SB P/N PAGE 12. MODIFY SB P/N
	3A	PAGE 06. ADD DVI SERIAL RESISTORS FOR EMI PAGE 09. MODIFY DDR2 CONNECTOR P/N PAGE 10. MODIFY RGB BEAD FROM 22 TO 30 PAGE 13. MODIFY CRYSTAL SERIAL RESISTOR R354 TO 200 OHM PAGE 14. MODIFY PCI BUS PAGE 15. MODIFY 1394 POWER SWITCH GATE ENABLE SIGNAL PAGE 16. MODIFY USB POWER SWITCH PAGE 17. MODIFY AUDIO POWER & AMP INPUT CIRCUIT PAGE 18. MODIFY FAN & SW BOARD CONNECTOR P/N PAGE 21. MODIFY RGB FOR EMI SOLUTION PAGE 22. MODIFY CAPACITOR FOR NOISE PAGE 23. STUFF SNUBBER CIRCUIT PAGE 24. UN-STUFF PC23 & STUFF SNUBBER CIRCUIT PAGE 25. STUFF SNUBBER CIRCUIT PAGE 26. STUFF SNUBBER CIRCUIT

MODEL : ZH1 MB

PAGE	FROM	TO
1	1A	
2	2A	
3	2A	
4	1A	
5	2B	
6	2B	3A
7	2B	
8	2B	
9	2A	3A
10	2A	3A
11	2B	
12	2B	
13	2A	3A
14	2A	3A
15	2A	3A
16	2A	3A
17	2A	3A
18	2A	3A
19	2A	
20	2A	
21	2A	3A
22	2A	3A
23	2A	3A
24	2A	3A
25	2A	3A
26	2A	3A

Quanta Computer Inc.	PROJECT : ZH1	APPROVE BY: JIM HSU	DRAWING BY:JACKY CHENG	REV 3A
	MB ASSY'S P/N : 31ZH1MB0001	PROJECT LEADER: JIM HSU	DOCUMENT NO: 204	DATE :2004/12/16

COVER SHEET 1 OF 1

ZH1 Block Diagram

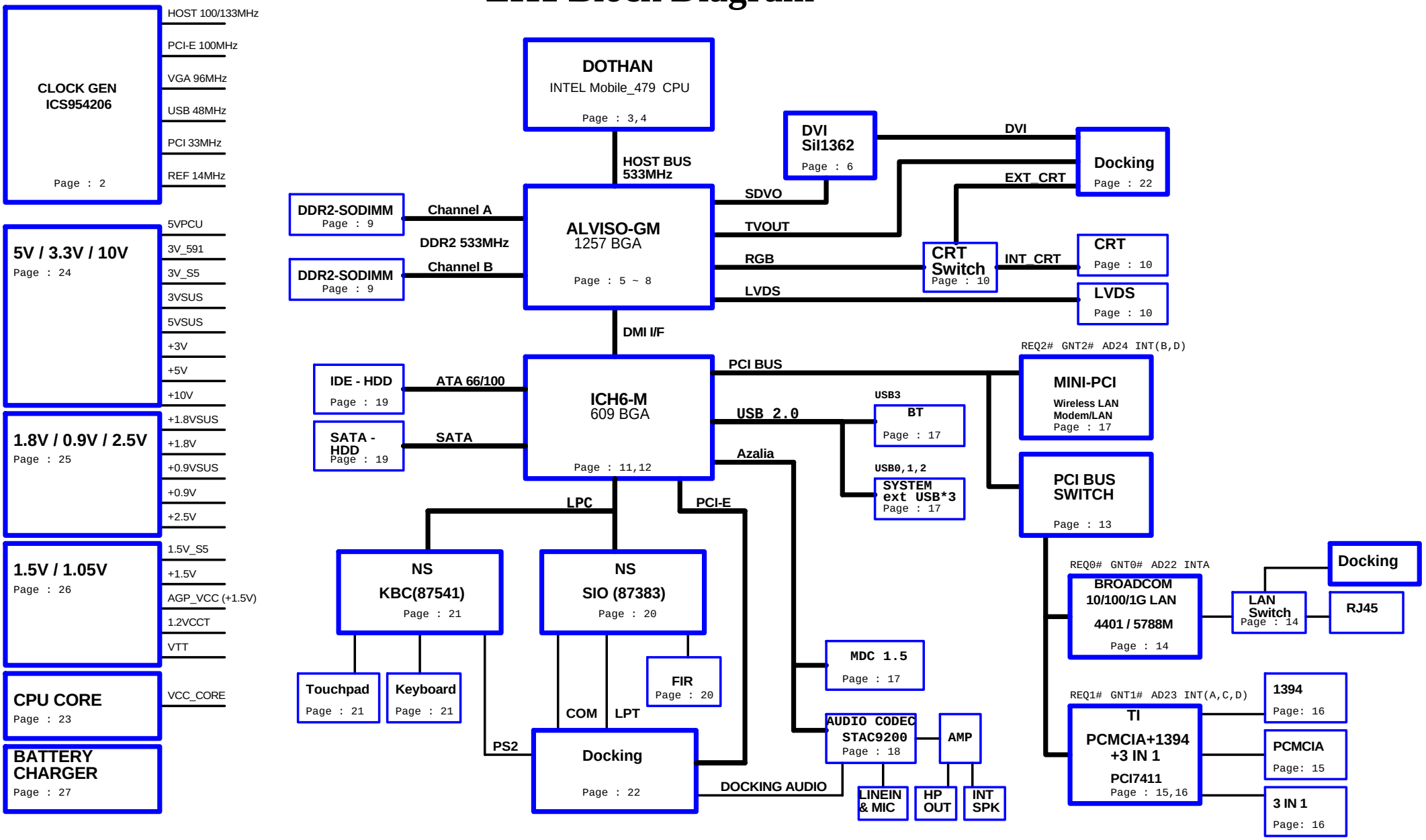

PCI ROUTING TABLE	IDSEL	INTERUPT	DEVICE
REQ0# / GNT0#	AD22	INTA#	BROADCOM LAN
REQ2# / GNT2#	AD24	INTB# , INTD#	MINI-PCI
REQ1# / GNT1#	AD23	INTC#,INTD#,INTA#	TI 7411

PROJECT : ZH1
Quanta Computer Inc.

Size	Document Number	Rev
	BLOCK DIAGRAM	1A

Date: Wednesday, January 19, 2005 Sheet 1 of 27

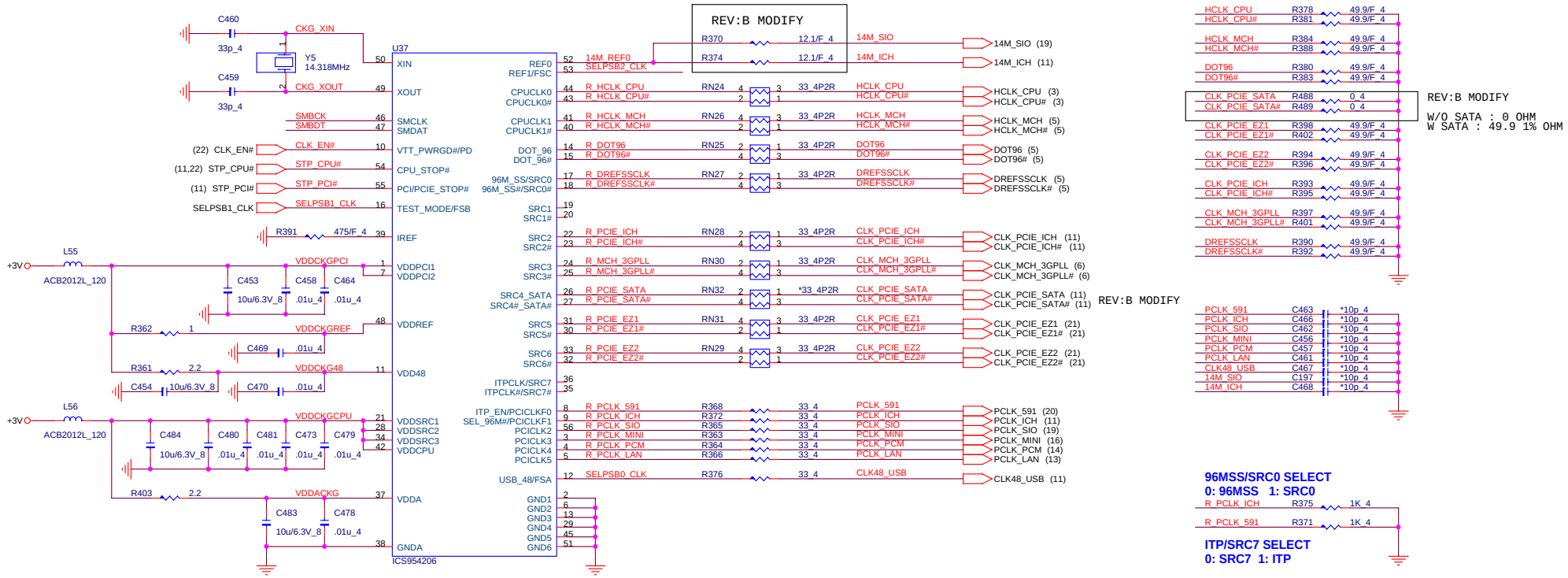

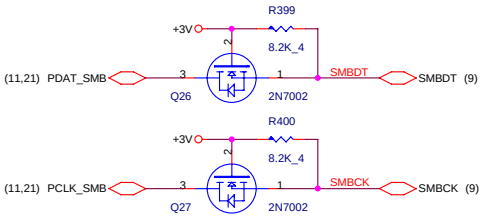

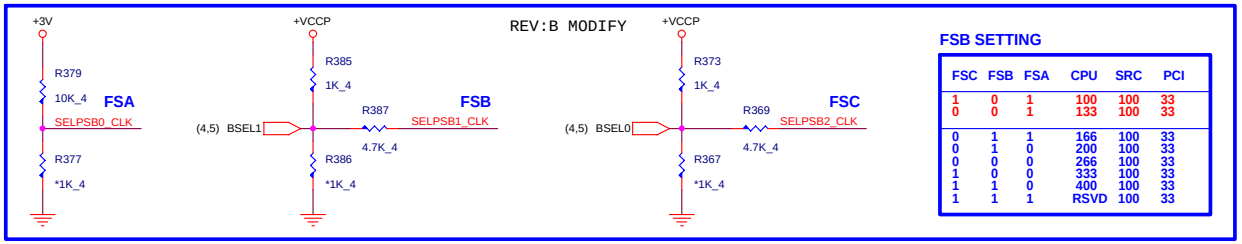

FSB SETTING

FSC	FSB	FSA	CPU	SRC	PCI
1	0	1	100	100	33
0	0	1	133	100	33
0	1	1	166	100	33
0	1	0	200	100	33
0	0	0	266	100	33
1	0	0	333	100	33
1	1	0	400	100	33
1	1	1	RSVD	100	33

PROJECT : ZH1
Quanta Computer Inc.

Size	Document Number	Rev
	CLOCK GENERATOR	2A

Date: Wednesday, January 19, 2005 Sheet 2 of 27

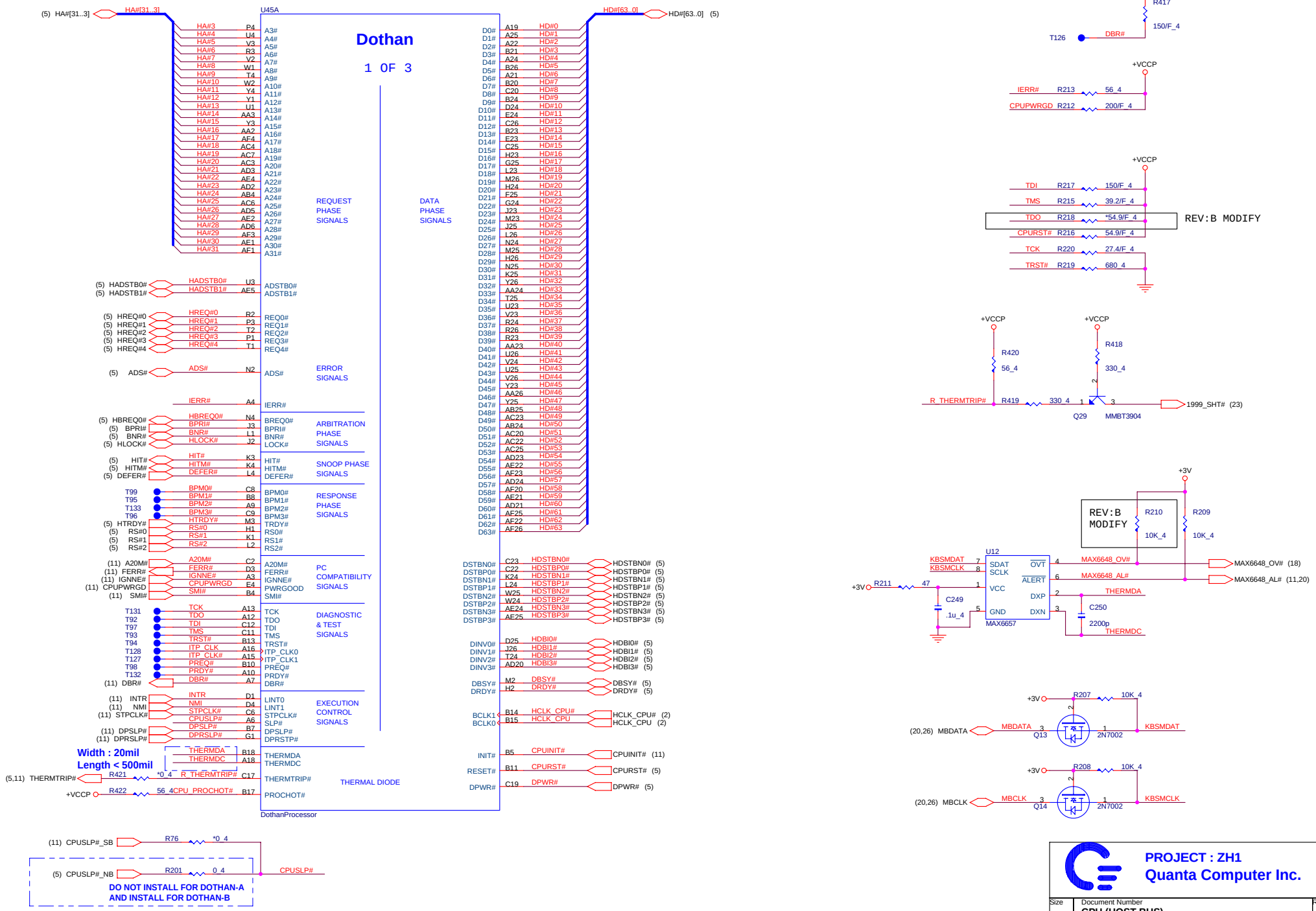
U45A
Dothan
1 OF 3
REQUEST PHASE SIGNALS
DATA PHASE SIGNALS
ERROR SIGNALS
ARBITRATION PHASE SIGNALS
SNOOP PHASE SIGNALS
RESPONSE PHASE SIGNALS
PC COMPATIBILITY SIGNALS
DIAGNOSTIC & TEST SIGNALS
EXECUTION CONTROL SIGNALS
THERMAL DIODE
DothanProcessor
Width : 20mil
Length < 500mil
DO NOT INSTALL FOR DOTHAN-A
AND INSTALL FOR DOTHAN-B
REV:B MODIFY
REV:B MODIFY
MAX6657
MMBT3904
2N7002
2N7002
PROJECT : ZH1
Quanta Computer Inc.
Document Number
CPU (HOST BUS)
Rev 2A
Date: Wednesday, January 19, 2005
Sheet 3 of 27

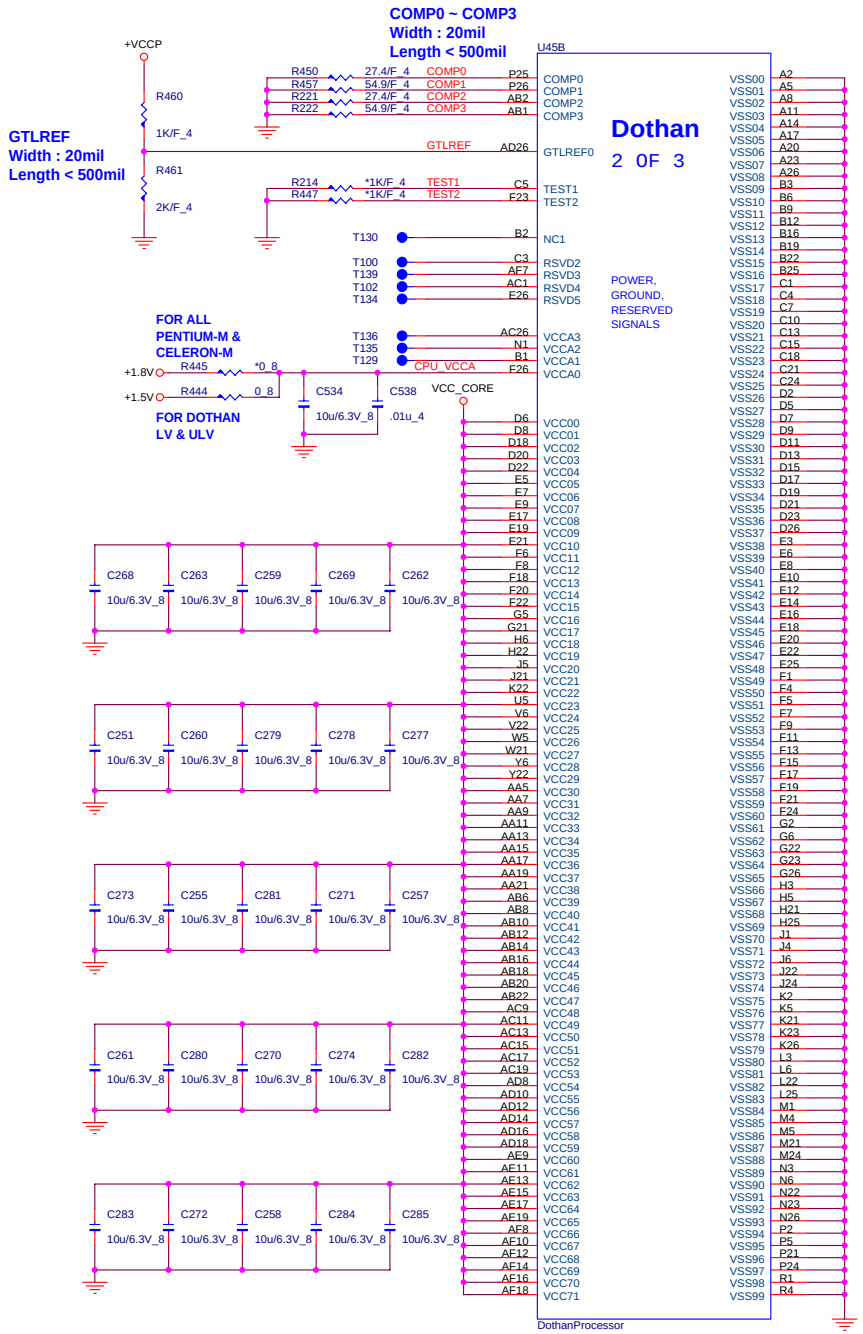

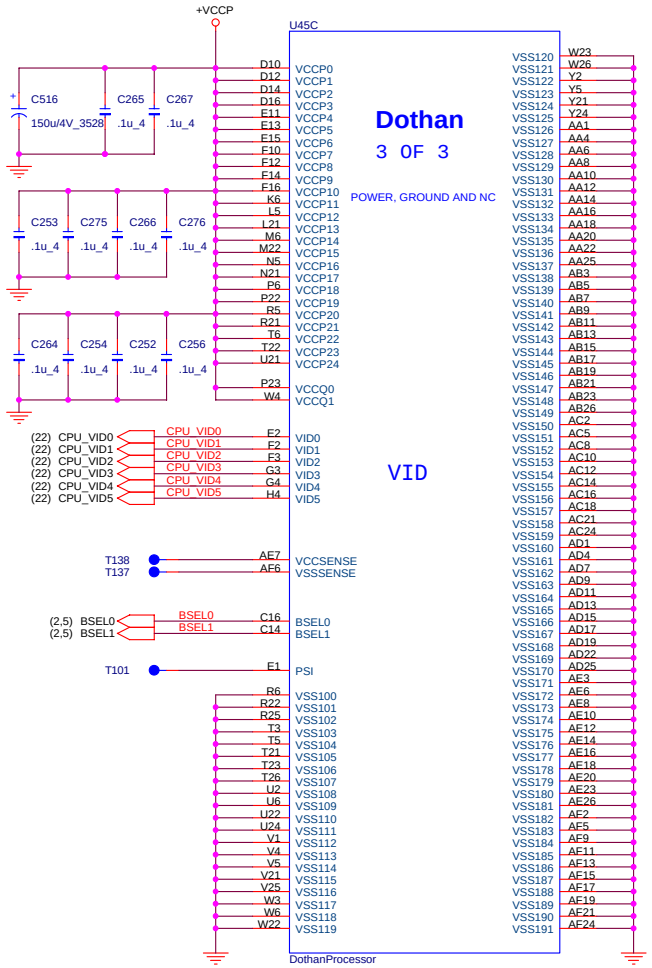

PROJECT : ZH1
Quanta Computer Inc.

Size	Document Number	Rev
	CPU (POWER)	1A

Date: Wednesday, January 19, 2005 Sheet 4 of 27

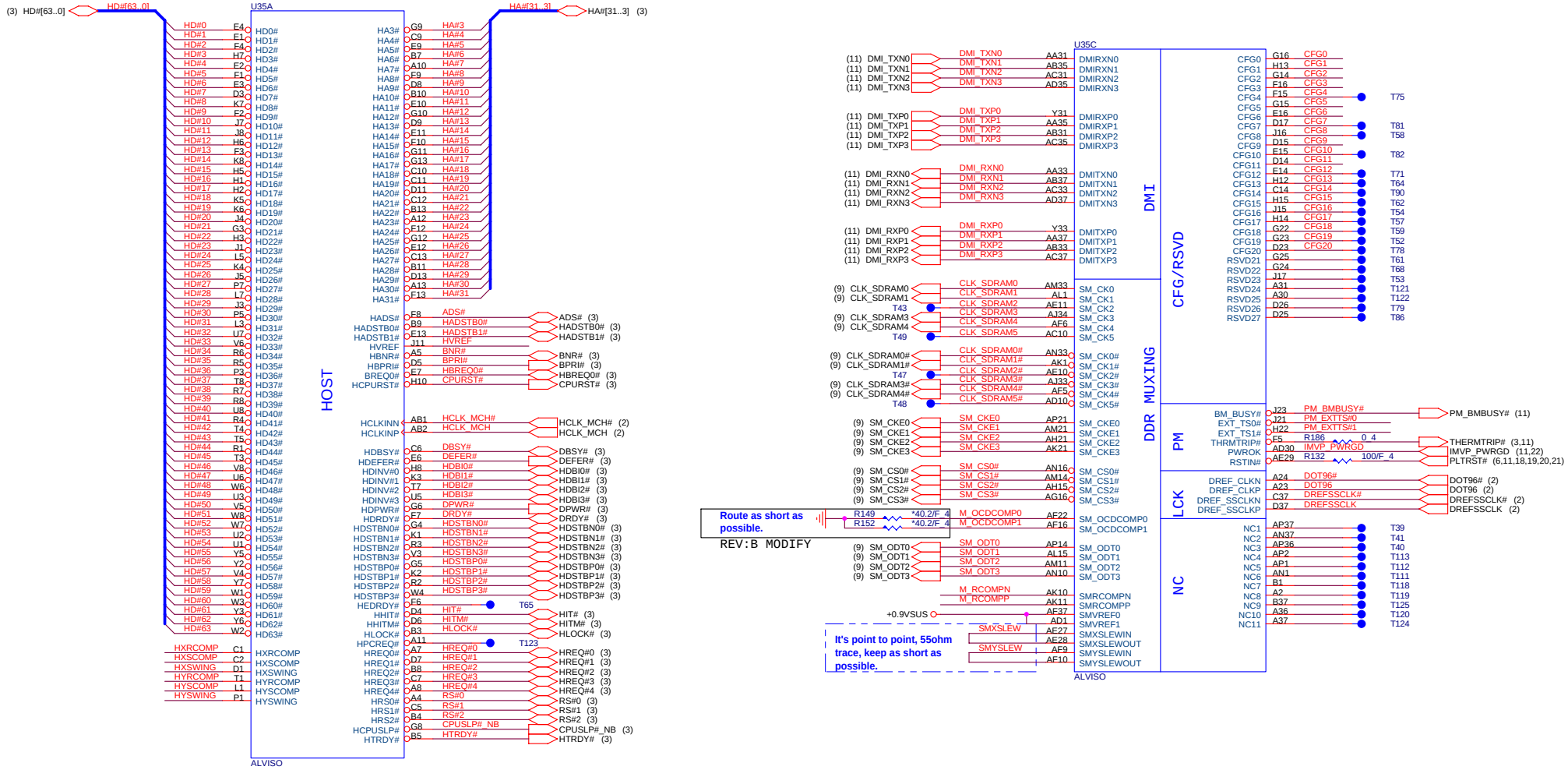

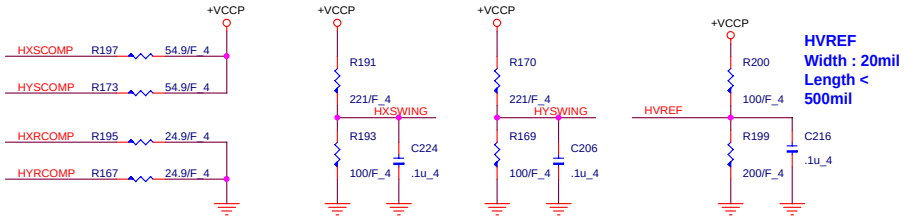

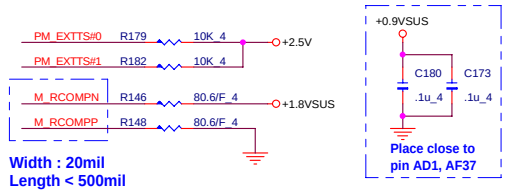

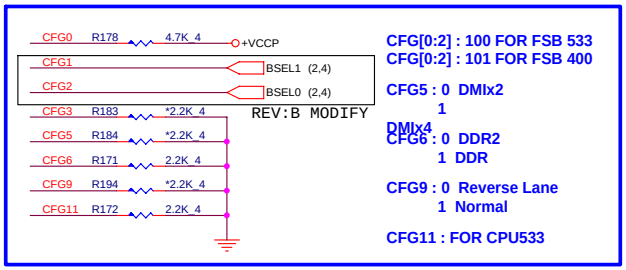

PROJECT : ZH1

Quanta Computer Inc.

Size	Document Number	Rev
	GMCH (HOST/DMI)	2B

Date: Wednesday, January 19, 2005 Sheet 5 of 27

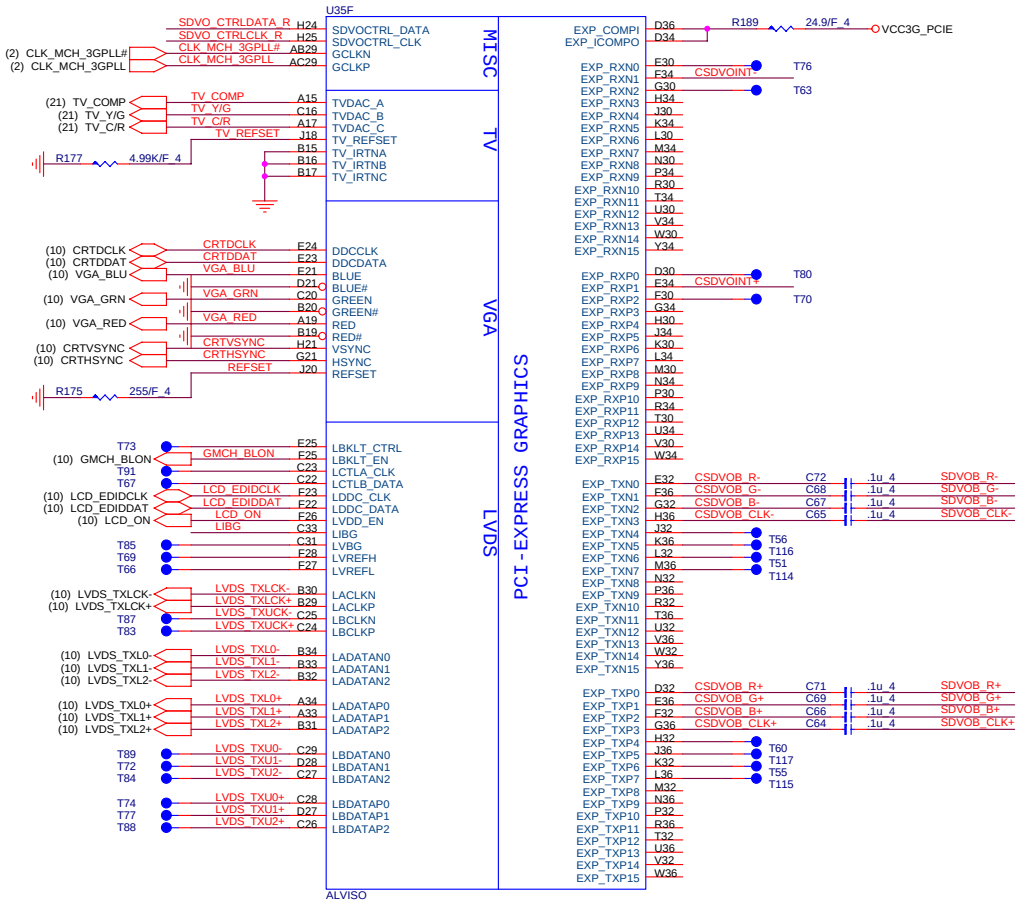

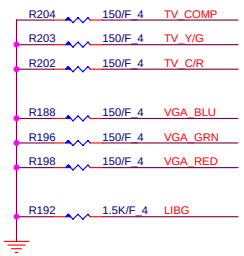

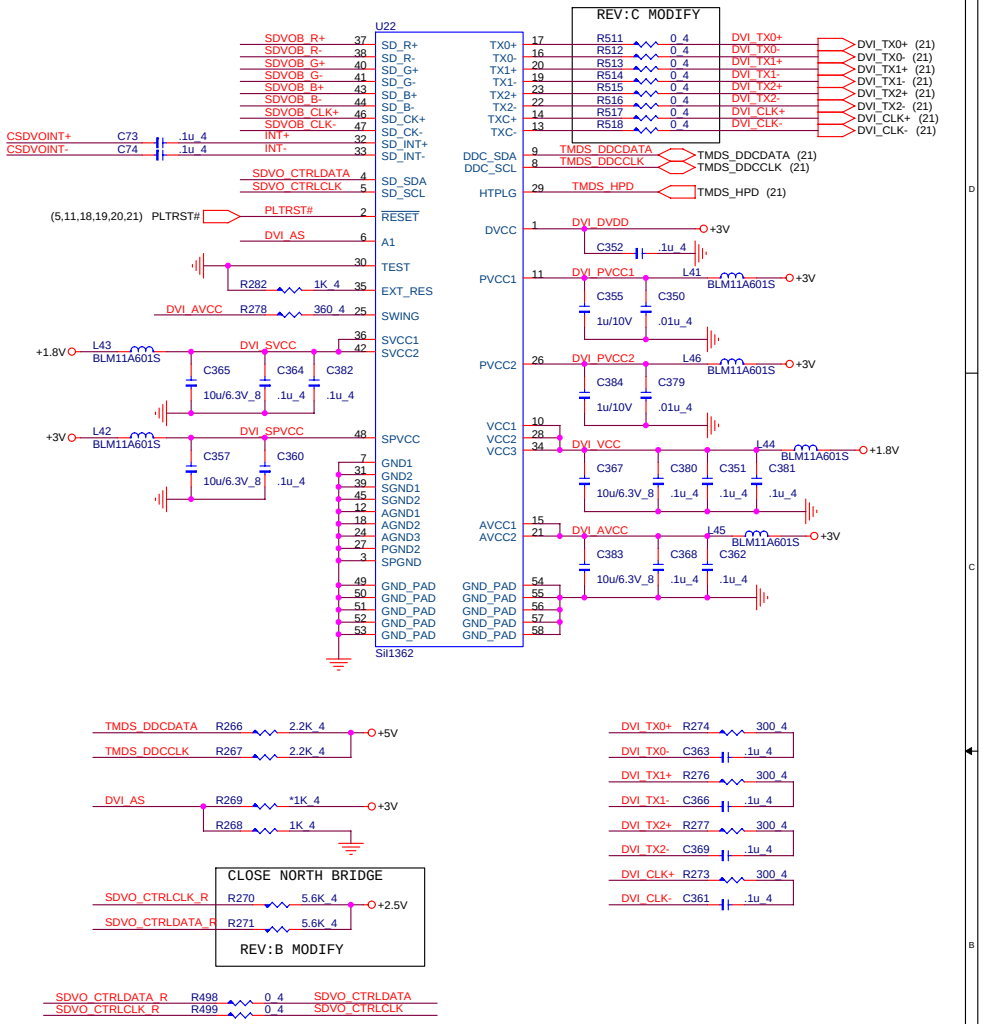

PROJECT : ZH1

Quanta Computer Inc.

Size	Document Number	Rev
	GMCH (VGA)	3A

Date: Wednesday, January 19, 2005 Sheet 6 of 27

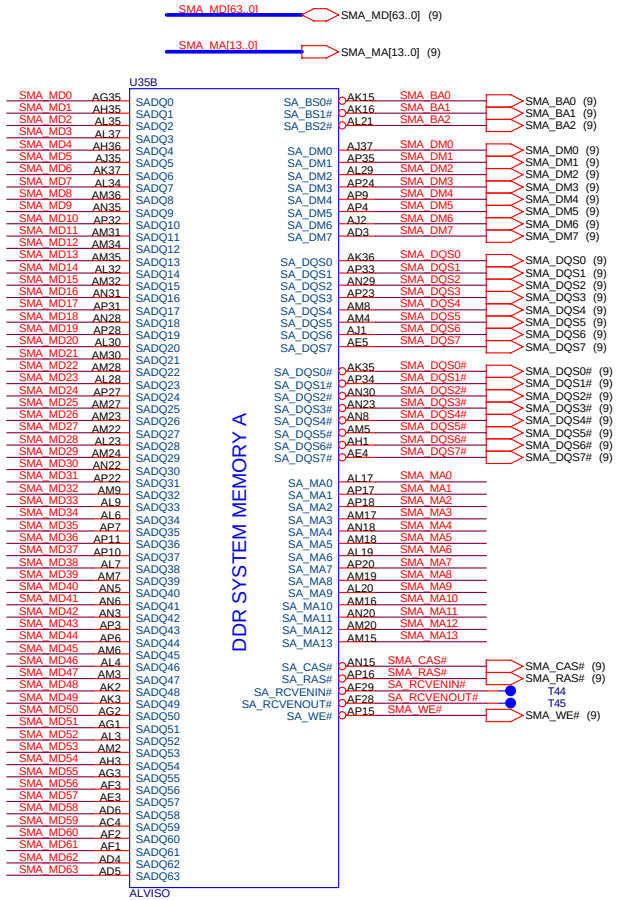

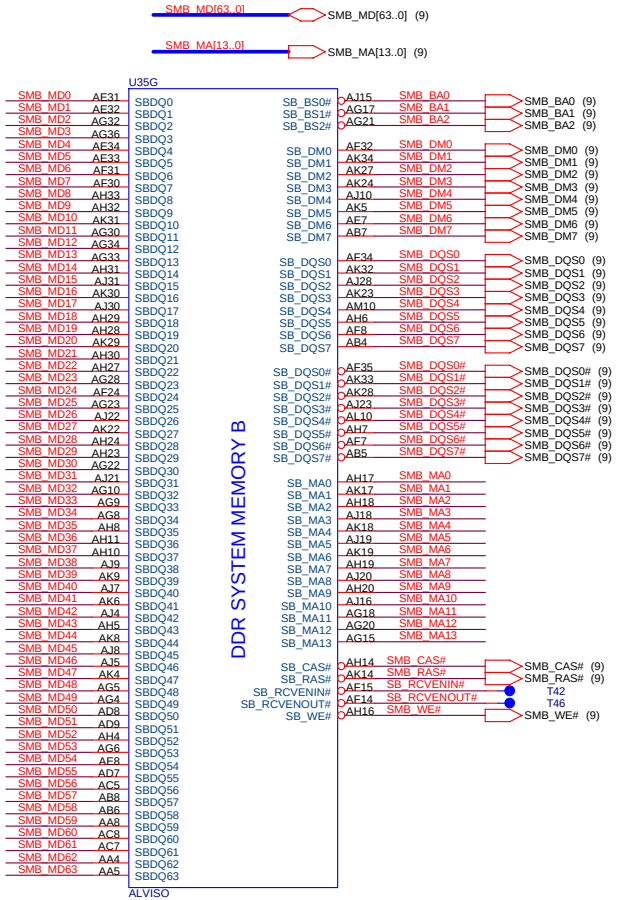

PROJECT : ZH1

Quanta Computer Inc.

Size	Document Number	Rev
	GMCH (MEMORY)	2B

Date: Wednesday, January 19, 2005 Sheet 7 of 27

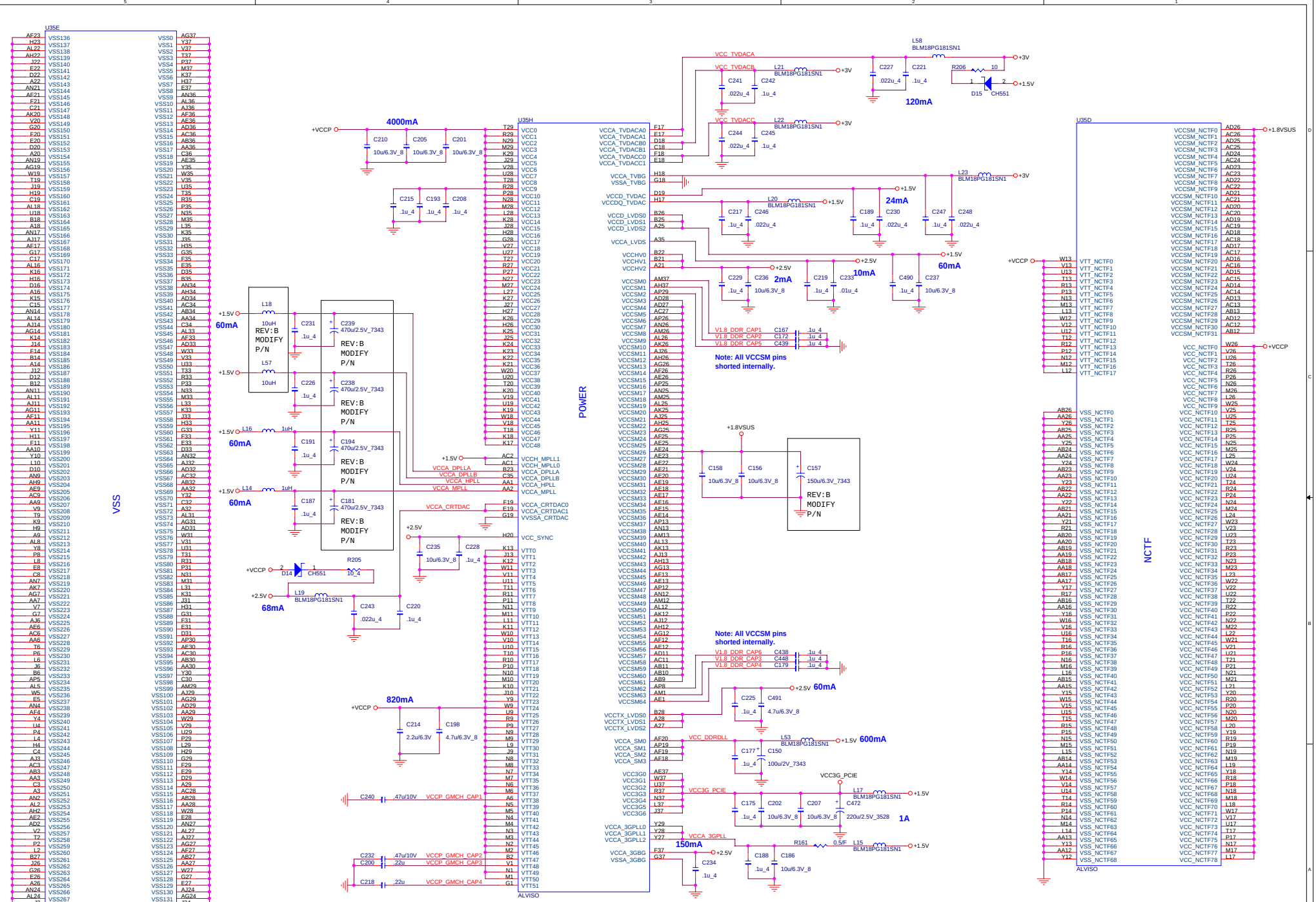
U35E
VSS
U35H
POWER
U35D
NCTF
4000mA
120mA
24mA
60mA
10mA
2mA
600mA
1A
150mA
820mA
68mA
Note: All VCCSM pins shorted internally.
REV:B MODIFY P/N
PROJECT : ZH1
Quanta Computer Inc.
Size
Document Number
GMCH (POWER)
Rev 2B
Date: Wednesday, January 19, 2005
Sheet 8 of 27

TERMINATOR DECOUPLING CAPACITOR

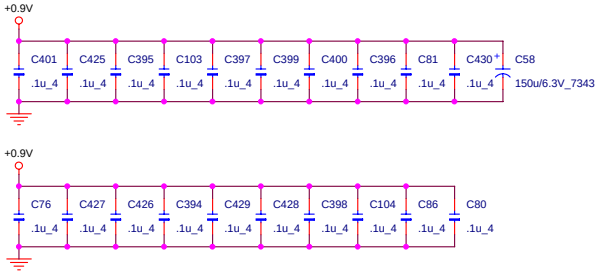

DDR2 TERMINATOR

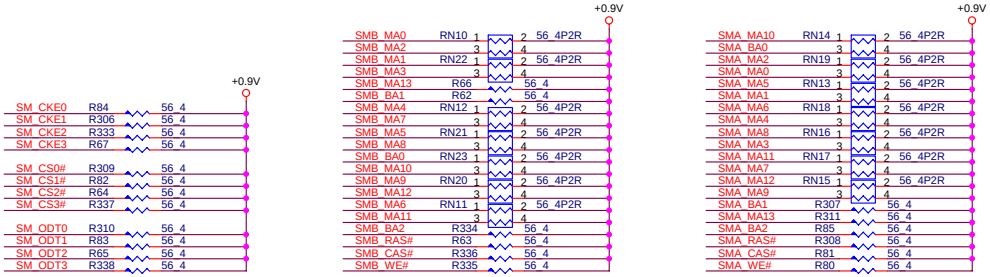

DDR2 SO-DIMM SOCKET

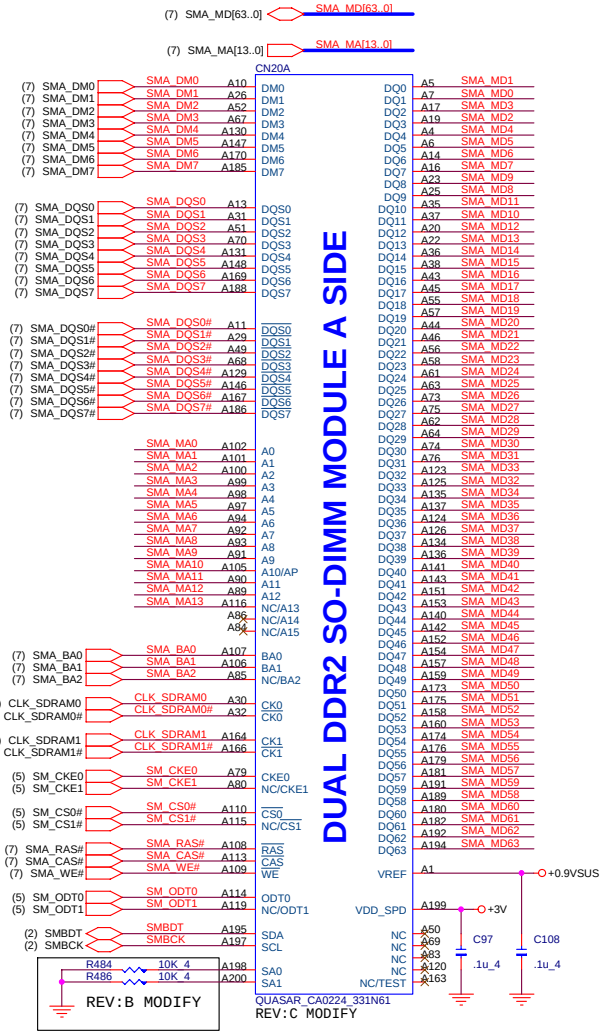

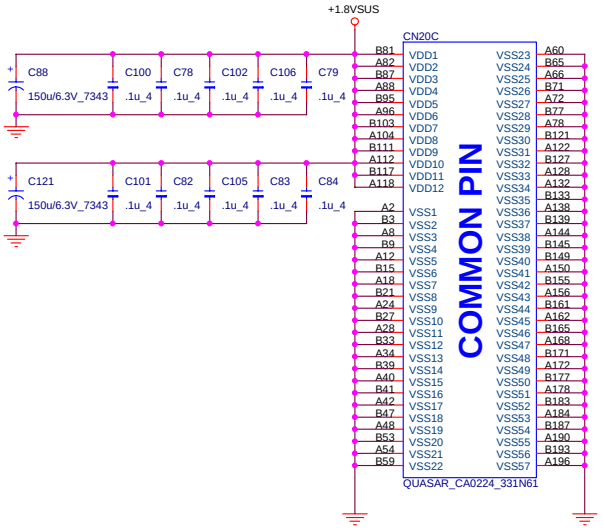

PROJECT : ZH1
Quanta Computer Inc.

Size	Document Number	Rev
	DDR2 SO-DIMM & TERMINATOR	3A

Date: Wednesday, January 19, 2005 Sheet 9 of 27

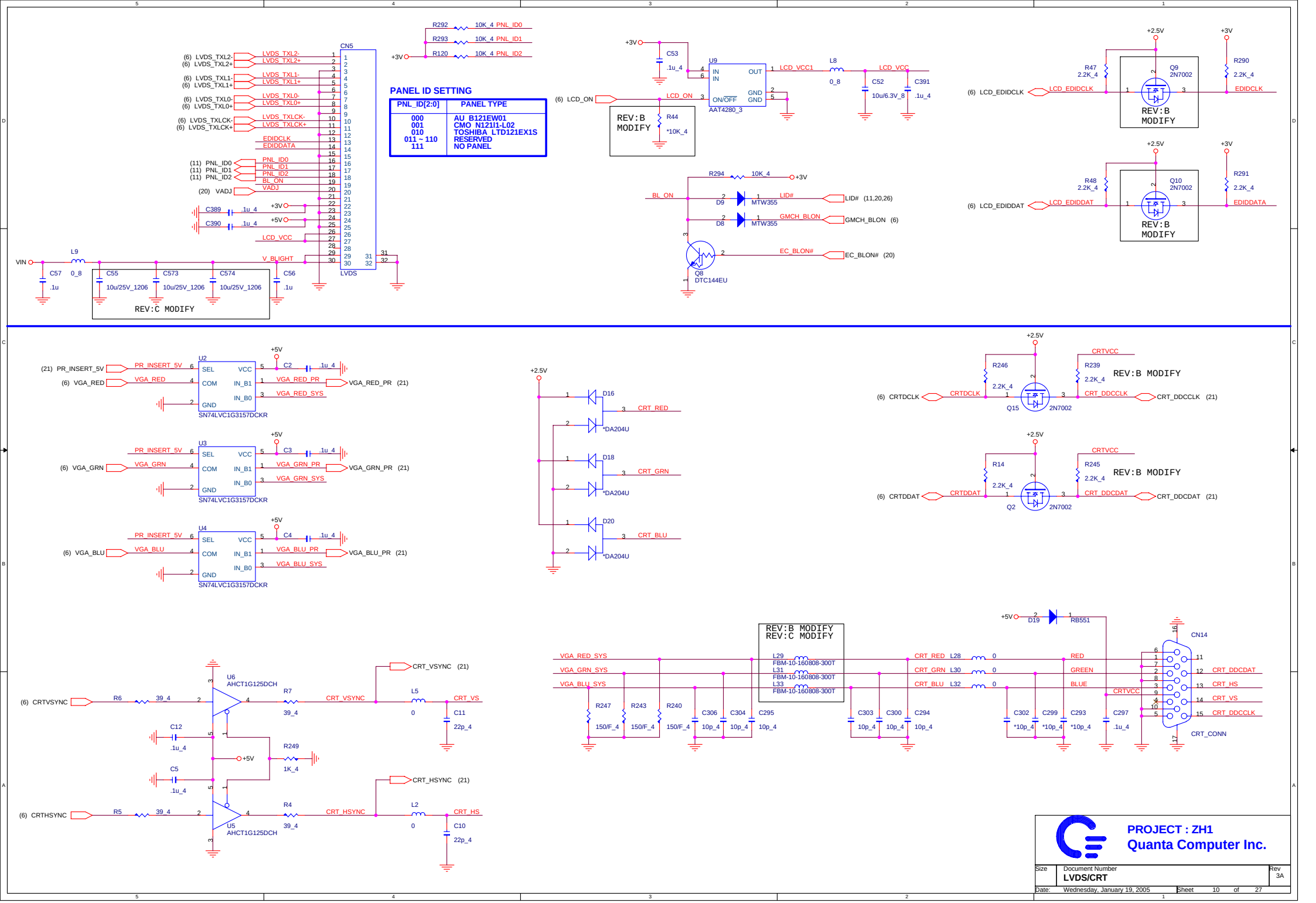

PROJECT : ZH1
Quanta Computer Inc.

Size	Document Number	Rev
	LVDS/CRT	3A

Date: Wednesday, January 19, 2005 Sheet 10 of 27

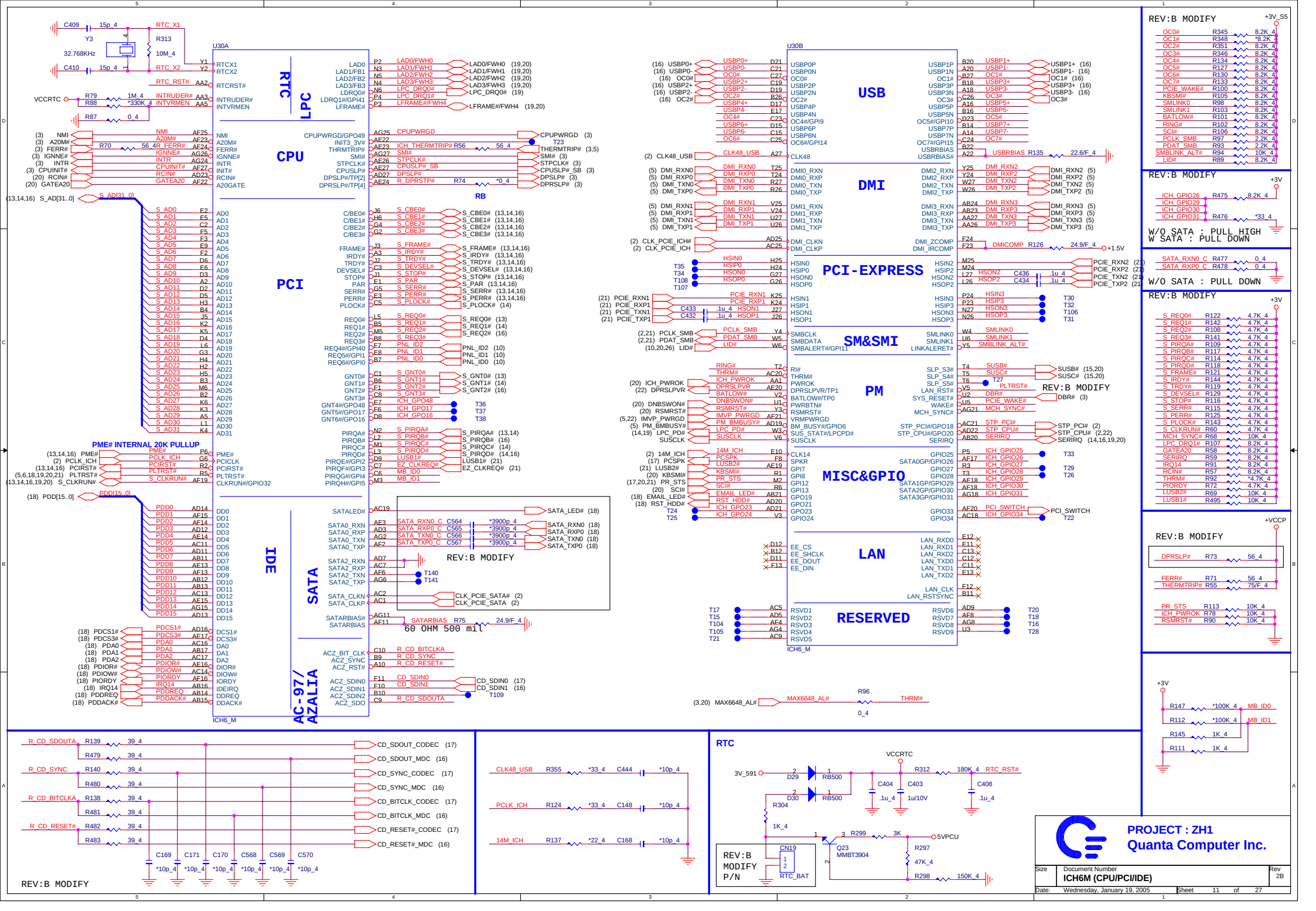
U30A
RTC
LPC
CPU
PCI
IDE
SATA
AC-97/ AZALIA
ICH6_M
U30B
USB
DMI
PCI-EXPRESS
SM&SMI
PM
MISC&GPIO
LAN
RESERVED
ICH6_M
REV:B MODIFY
PME# INTERNAL 20K PULLUP
60 OHM 500 mil
RTC
VCCRTC
3V_591
D29
D30
RB500
R304
1K_4
CN19
RTC_BAT
Q23
MMBT3904
R299
3K
5VPCU
R297
47K_4
R298
150K_4
R312
180K_4
RTC_RST#
C404
C403
C408
.1u_4
1u/10V
PROJECT : ZH1
Quanta Computer Inc.
Size
Document Number
ICH6M (CPU/PCI/IDE)
Rev
2B
Date: Wednesday, January 19, 2005
Sheet 11 of 27

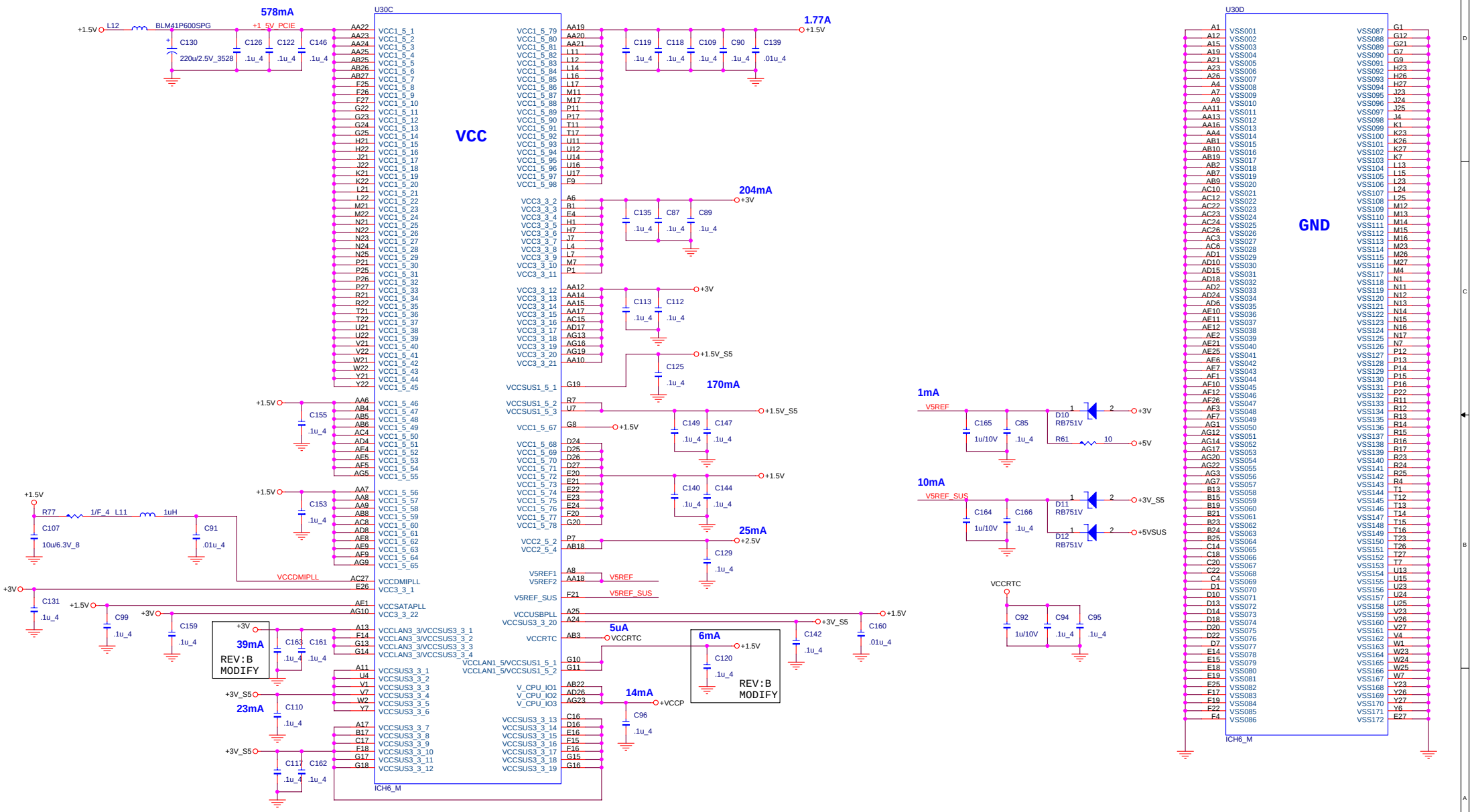

PROJECT : ZH1

Quanta Computer Inc.

Size	Document Number	Rev
	ICH6M (POWER)	2B

Date: Wednesday, January 19, 2005 Sheet 12 of 27

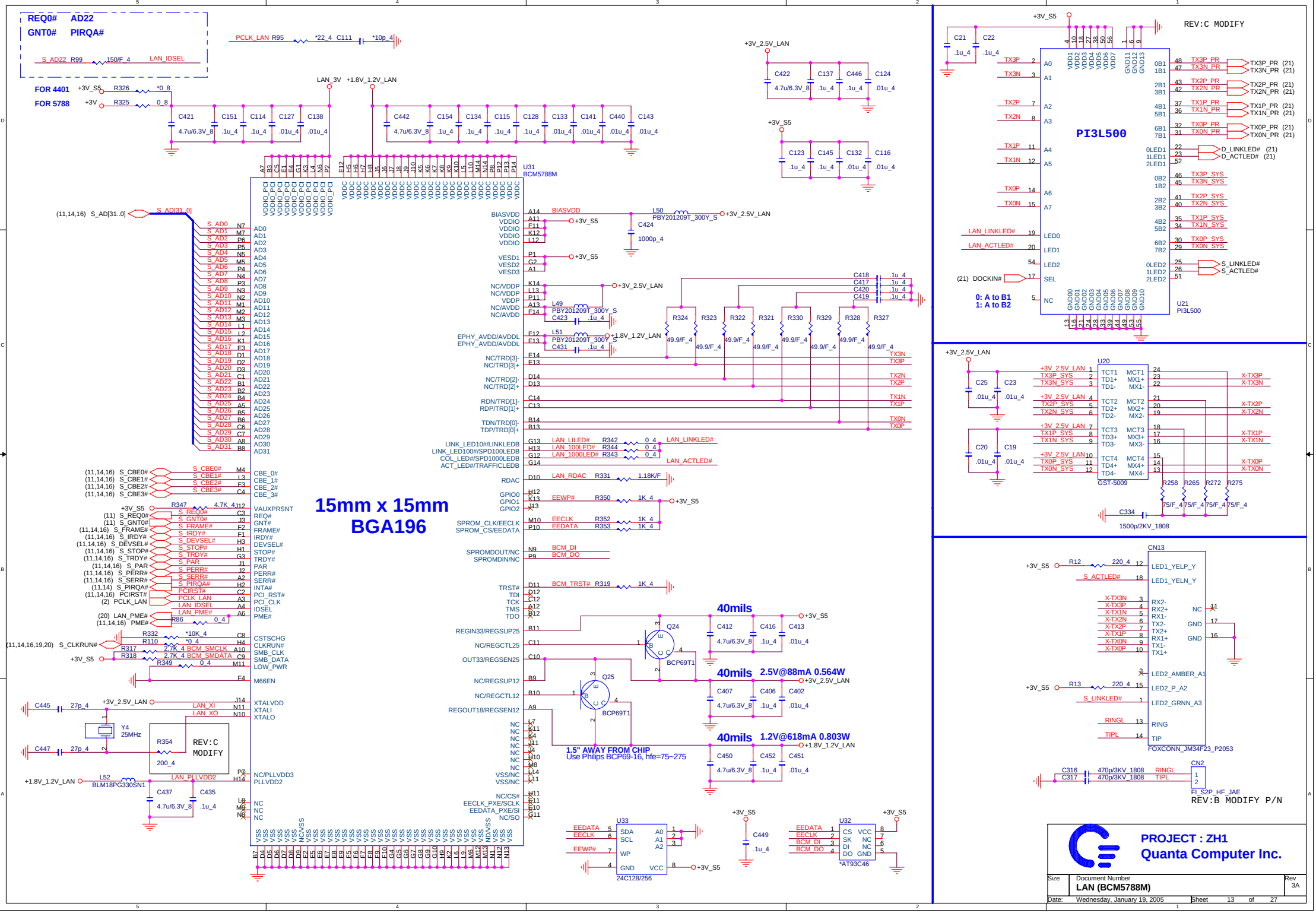
REQ0# AD22
GNT0# PIRQA#
S_AD22 R99 150/F_4 LAN_IDSEL
FOR 4401 +3V_S5 R326 *0_8
FOR 5788 +3V R325 0_8
PCLK_LAN R95 *22_4 C111 *10p_4
LAN_3V +1.8V_1.2V_LAN
C421 4.7u/6.3V_8 C151 .1u_4 C114 .1u_4 C127 .01u_4 C138 .01u_4
C442 4.7u/6.3V_8 C154 .1u_4 C134 .1u_4 C115 .1u_4 C128 .1u_4 C133 .01u_4 C141 .01u_4 C440 .01u_4 C143 .01u_4
+3V_2.5V_LAN
C422 4.7u/6.3V_8 C137 .1u_4 C446 .1u_4 C124 .01u_4
+3V_S5
C123 .1u_4 C145 .1u_4 C132 .01u_4 C116 .01u_4
U31
BCM5788M
(11,14,16) S_AD[31..0]
S_AD[31..0]
BIASVDD
L50 PBY201209T_300Y_S
C424 1000p_4
L49 PBY201209T_300Y_S
C423 .1u_4
L51 PBY201209T_300Y_S
C431 .1u_4
R324 R323 R322 R321 R330 R329 R328 R327
49.9/F_4
C418 C417 C420 C419 .1u_4
EPHY_AVDD/AVDDL
NC/TRD[3]-
NC/TRD[3]+
NC/TRD[2]-
NC/TRD[2]+
RDN/TRD[1]-
RDP/TRD[1]+
TDN/TRD[0]-
TDP/TRD[0]+
TX3N TX3P TX2N TX2P TX1N TX1P TX0N TX0P
LINK_LED10#/LINKLEDB
LINK_LED100#/SPD100LEDB
COL_LED#/SPD1000LEDB
ACT_LED#/TRAFFICLEDB
LAN_LILED# R342 0_4 LAN_LINKLED#
LAN_100LED# R344 0_4
LAN_1000LED# R343 0_4
LAN_ACTLED#
RDAC LAN_RDAC R331 1.18K/F
GPIO0 GPIO1 GPIO2
EEWP# R350 1K_4
SPROM_CLK/EECLK
SPROM_CS/EEDATA
EECLK R352 1K_4
EEDATA R353 1K_4
SPROMDOUT/NC
SPROMDIN/NC
BCM_DI
BCM_DO
TRST# TDI TCK TMS TDO
BCM_TRST# R319 1K_4
REGIN33/REGSUP25
NC/REGCTL25
OUT33/REGSEN25
NC/REGSUP12
NC/REGCTL12
REGOUT18/REGSEN12
Q24 BCP69T1
Q25 BCP69T1
40mils
C412 4.7u/6.3V_8 C416 .1u_4 C413 .01u_4
40mils 2.5V@88mA 0.564W
C407 4.7u/6.3V_8 C406 .1u_4 C402 .01u_4
40mils 1.2V@618mA 0.803W
C450 4.7u/6.3V_8 C452 .1u_4 C451 .01u_4
1.5" AWAY FROM CHIP
Use Philips BCP69-16, hfe=75~275
15mm x 15mm
BGA196
(11,14,16) S_CBE0#
(11,14,16) S_CBE1#
(11,14,16) S_CBE2#
(11,14,16) S_CBE3#
CBE_0# CBE_1# CBE_2# CBE_3#
+3V_S5 R347 4.7K_4
VAUXPRSNT
(11) S_REQ0# REQ#
(11) S_GNT0# GNT#
(11,14,16) S_FRAME# FRAME#
(11,14,16) S_IRDY# IRDY#
(11,14,16) S_DEVSEL# DEVSEL#
(11,14,16) S_STOP# STOP#
(11,14,16) S_TRDY# TRDY#
(11,14,16) S_PAR PAR
(11,14,16) S_PERR# PERR#
(11,14,16) S_SERR# SERR#
(11,14) S_PIRQA# INTA#
(11,14,16) PCIRST# PCI_RST#
(2) PCLK_LAN PCI_CLK
LAN_IDSEL IDSEL
(20) LAN_PME# PME#
(11,14,16) PME# R86 0_4
R332 *10K_4 CSTSCHG
(11,14,16,19,20) S_CLKRUN# R110 *0_4 CLKRUN#
R317 2.7K_4 BCM_SMCLK SMB_CLK
+3V_S5 R318 2.7K_4 BCM_SMDATA SMB_DATA
R349 0_4 LOW_PWR
M66EN
C445 27p_4 +3V_2.5V_LAN LAN_XI XTALVDD
Y4 25MHz XTALI
LAN_XO XTALO
C447 27p_4
R354 200_4 REV:C MODIFY
+1.8V_1.2V_LAN L52 BLM18PG330SN1 LAN_PLLVDD2 NC/PLLVDD3 PLLVDD2
C437 4.7u/6.3V_8 C435 .1u_4
NC NC NC
EECLK_PXE/SCLK
EEDATA_PXE/SI
NC/SO
U33 24C128/256
EEDATA EECLK EEWP# SDA SCL WP GND A0 A1 A2 VCC +3V_S5
C449 .1u_4
U32 *AT93C46
EEDATA EECLK BCM_DI BCM_DO CS SK DI DO VCC NC NC GND
REV:C MODIFY
PI3L500
U21
0: A to B1
1: A to B2
(21) DOCKIN#
LAN_LINKLED# LAN_ACTLED#
TX3P_PR TX3N_PR TX2P_PR TX2N_PR TX1P_PR TX1N_PR TX0P_PR TX0N_PR
D_LINKLED# D_ACTLED#
TX3P_SYS TX3N_SYS TX2P_SYS TX2N_SYS TX1P_SYS TX1N_SYS TX0P_SYS TX0N_SYS
S_LINKLED# S_ACTLED#
U20 GST-5009
C25 C23 C20 C19 .01u_4
X-TX3P X-TX3N X-TX2P X-TX2N X-TX1P X-TX1N X-TX0P X-TX0N
R258 R265 R272 R275 75/F_4
C334 1500p/2KV_1808
CN13 FOXCONN_JM34F23_P2053
R12 220_4 LED1_YELP_Y
S_ACTLED# LED1_YELN_Y
R13 220_4 LED2_AMBER_A1
S_LINKLED# LED2_P_A2
LED2_GRNN_A3
RINGL RING
TIPL TIP
C316 470p/3KV_1808 RINGL
C317 470p/3KV_1808 TIPL
CN2 FI_S2P_HF_JAE
REV:B MODIFY P/N
PROJECT : ZH1
Quanta Computer Inc.
Size
Document Number
LAN (BCM5788M)
Rev 3A
Date: Wednesday, January 19, 2005
Sheet 13 of 27

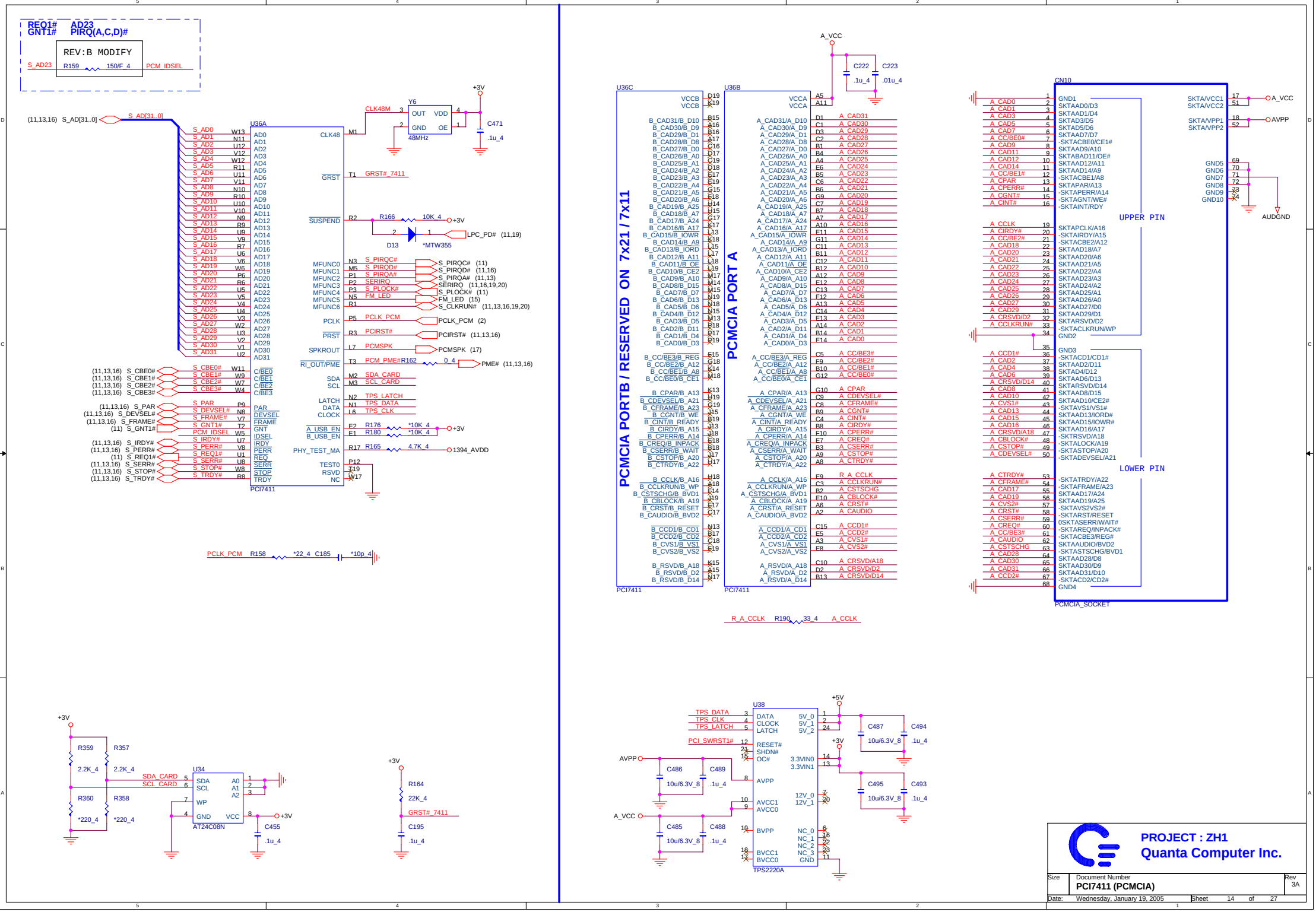
REQ1# AD23
GNT1# PIRQ(A,C,D)#
REV:B MODIFY
S_AD23
R159
150/F_4
PCM_IDSEL
U36A
PCI7411
Y6
48MHz
CLK48M
C471
.1u_4
+3V
GRST
GRST#_7411
SUSPEND
R166
10K_4
D13
*MTW355
LPC_PD# (11,19)
S_PIRQC# (11)
S_PIRQD# (11,16)
S_PIRQA# (11,13)
SERIRQ (11,16,19,20)
S_PLOCK# (11)
FM_LED (15)
S_CLKRUN# (11,13,16,19,20)
PCLK_PCM (2)
PCIRST# (11,13,16)
PCMSPK (17)
PCM_PME#
PME# (11,13,16)
SDA_CARD
SCL_CARD
TPS_LATCH
TPS_DATA
TPS_CLK
*10K_4
1394_AVDD
PCLK_PCM
R158
*22_4
C185
*10p_4
U36C
U36B
PCMCIA PORTB / RESERVED ON 7x21 / 7x11
PCMCIA PORT A
A_VCC
C222
C223
.1u_4
.01u_4
R_A_CCLK
R190
33_4
A_CCLK
CN10
PCMCIA_SOCKET
UPPER PIN
LOWER PIN
SKTA/VCC1
SKTA/VCC2
SKTA/VPP1
SKTA/VPP2
AVPP
AUDGND
U34
AT24C08N
SDA_CARD
SCL_CARD
R359
R357
R360
R358
2.2K_4
*220_4
C455
R164
22K_4
C195
U38
TPS2220A
TPS_DATA
TPS_CLK
TPS_LATCH
PCI_SWRST1#
C486
C489
C485
C488
10u/6.3V_8
C487
C494
C495
C493
PROJECT : ZH1
Quanta Computer Inc.
Size
Document Number
PCI7411 (PCMCIA)
Rev
3A
Date: Wednesday, January 19, 2005
Sheet 14 of 27

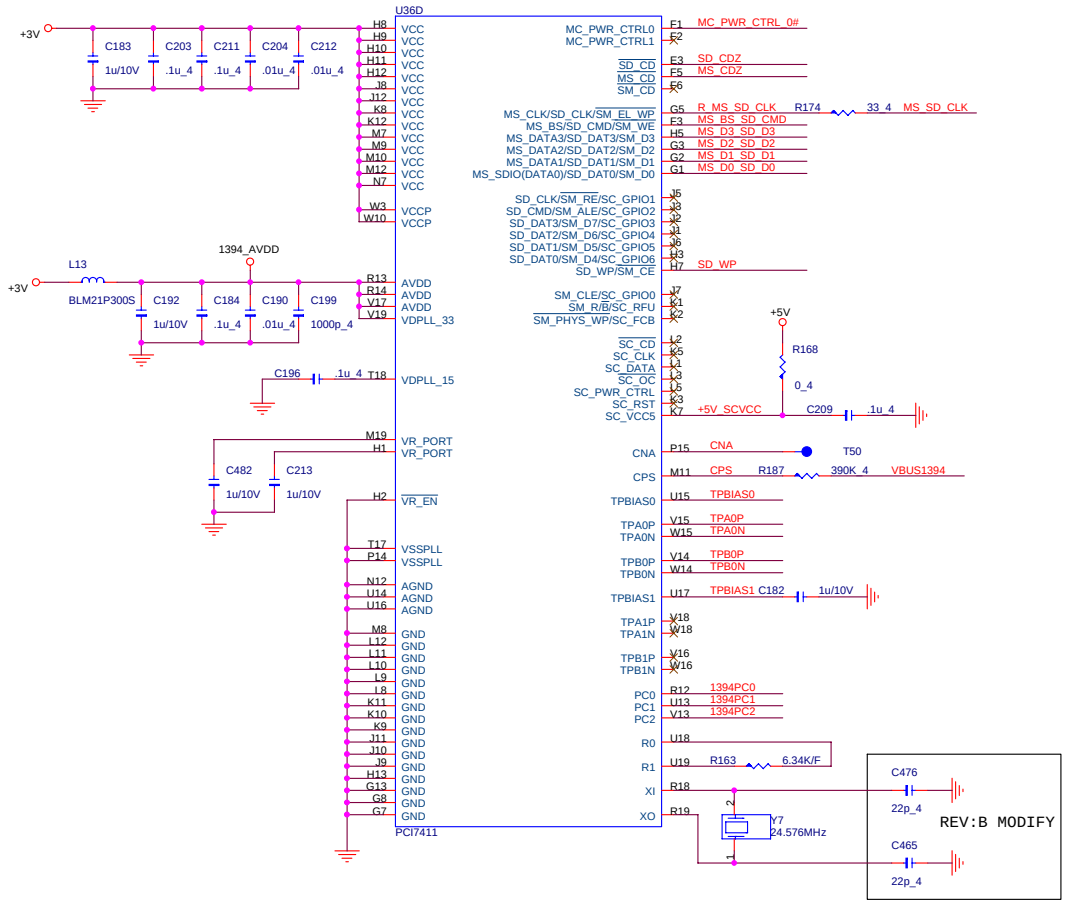

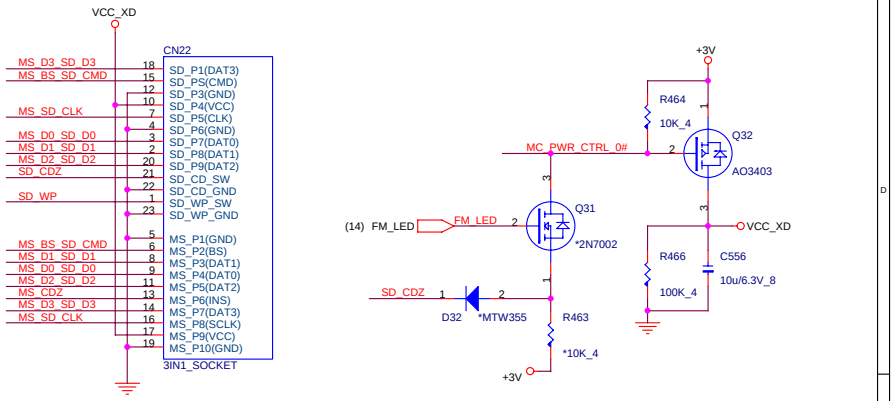

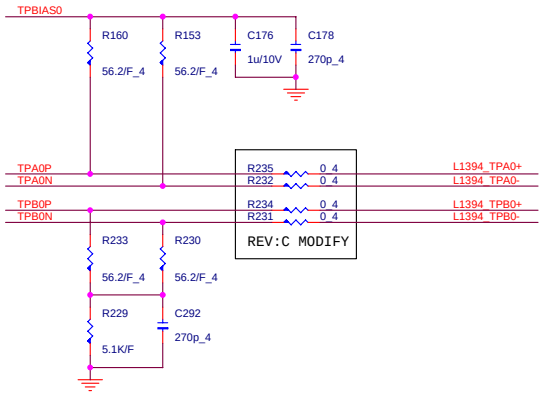

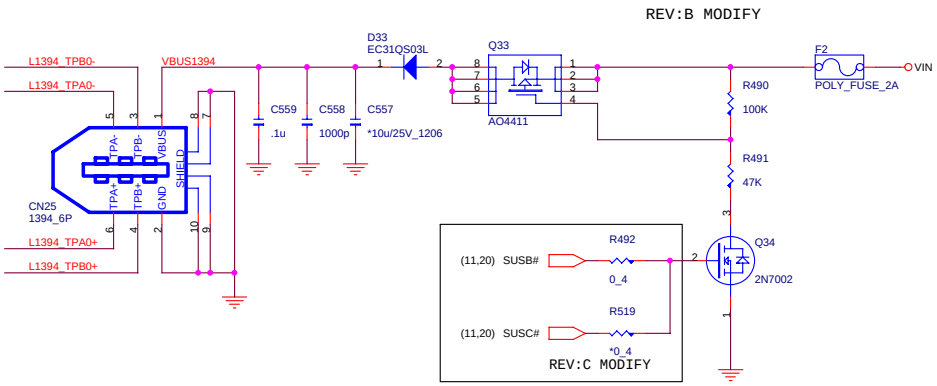

Power Class

PC[2:0]	VBUS POWER
000	No Power
001	15W
010	30W
011	45W

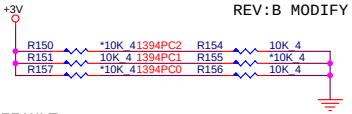

PROJECT : ZH1
Quanta Computer Inc.

Size	Document Number	Rev
	PCI7411 (1394/3IN1)	3A

Date: Wednesday, January 19, 2005 Sheet 15 of 27

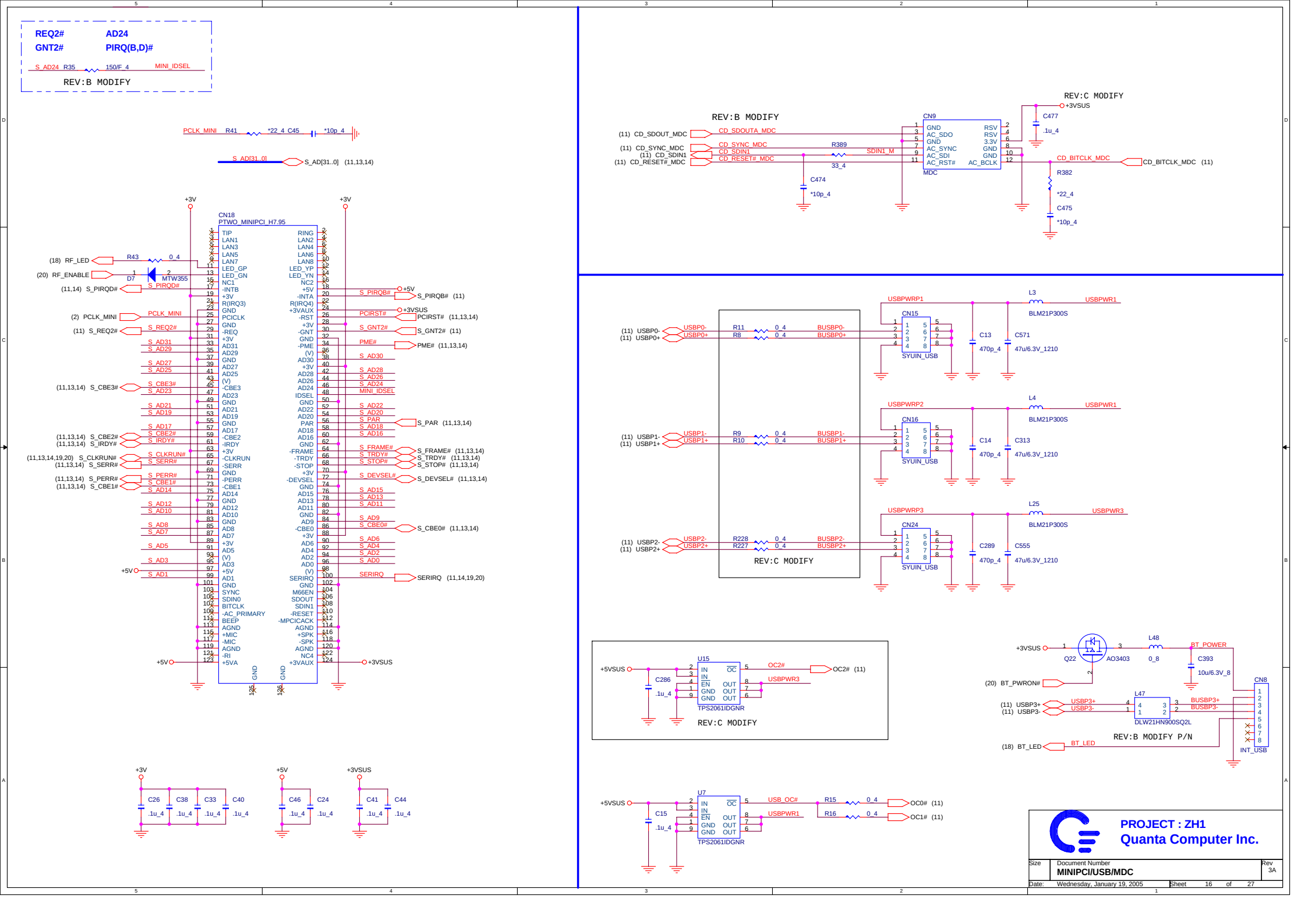
REQ2# AD24
GNT2# PIRQ(B,D)#
S_AD24 R35 150/F_4 MINI_IDSEL
REV:B MODIFY
PCLK_MINI R41 *22_4 C45 *10p_4
S_AD[31..0] S_AD[31..0] (11,13,14)
CN18
PTWO_MINIPCI_H7.95
(18) RF_LED R43 0_4
(20) RF_ENABLE D7 MTW355
(11,14) S_PIRQD#
(2) PCLK_MINI
(11) S_REQ2#
(11,13,14) S_CBE3#
(11,13,14) S_CBE2#
(11,13,14) S_IRDY#
(11,13,14,19,20) S_CLKRUN#
(11,13,14) S_SERR#
(11,13,14) S_PERR#
(11,13,14) S_CBE1#
S_PIRQB# (11)
PCIRST# (11,13,14)
S_GNT2# (11)
PME# (11,13,14)
S_PAR (11,13,14)
S_FRAME# (11,13,14)
S_TRDY# (11,13,14)
S_STOP# (11,13,14)
S_DEVSEL# (11,13,14)
S_CBE0# (11,13,14)
SERIRQ (11,14,19,20)
REV:C MODIFY
CN9
REV:B MODIFY
(11) CD_SDOUT_MDC
(11) CD_SYNC_MDC
(11) CD_SDIN1
(11) CD_RESET#_MDC
CD_SDOUTA_MDC
CD_SYNC_MDC
CD_SDIN1
CD_RESET# MDC
R389 33_4
SDIN1_M
C474 *10p_4
GND AC_SDO GND AC_SYNC AC_SDI AC_RST# MDC
RSV RSV 3.3V GND GND AC_BCLK
C477 .1u_4
CD_BITCLK_MDC
CD_BITCLK_MDC (11)
R382 *22_4
C475 *10p_4
USBPWRP1 USBPWR1
L3 BLM21P300S
CN15 SYUIN_USB
(11) USBP0- USBP0-
(11) USBP0+ USBP0+
R11 0_4 BUSBP0-
R8 0_4 BUSBP0+
C13 470p_4
C571 47u/6.3V_1210
USBPWRP2 USBPWR1
L4 BLM21P300S
CN16 SYUIN_USB
(11) USBP1- USBP1-
(11) USBP1+ USBP1+
R9 0_4 BUSBP1-
R10 0_4 BUSBP1+
C14 470p_4
C313 47u/6.3V_1210
USBPWRP3 USBPWR3
L25 BLM21P300S
CN24 SYUIN_USB
(11) USBP2- USBP2-
(11) USBP2+ USBP2+
R228 0_4 BUSBP2-
R227 0_4 BUSBP2+
C289 470p_4
C555 47u/6.3V_1210
REV:C MODIFY
+5VSUS C286 .1u_4
U15 TPS2061IDGNR
IN OC IN EN OUT GND OUT GND OUT
OC2# USBPWR3
OC2# (11)
REV:C MODIFY
+3VSUS Q22 AO3403
L48 0_8
BT_POWER
C393 10u/6.3V_8
(20) BT_PWRON#
(11) USBP3+ USBP3+
(11) USBP3- USBP3-
L47 DLW21HN900SQ2L
BUSBP3+ BUSBP3-
CN8 INT_USB
(18) BT_LED BT_LED
REV:B MODIFY P/N
+5VSUS C15 .1u_4
U7 TPS2061IDGNR
USB_OC# USBPWR1
R15 0_4 OC0# (11)
R16 0_4 OC1# (11)
+3V C26 C38 C33 C40 .1u_4
+5V C46 C24 .1u_4
+3VSUS C41 C44 .1u_4
PROJECT : ZH1
Quanta Computer Inc.
Size Document Number MINIPCI/USB/MDC Rev 3A
Date: Wednesday, January 19, 2005 Sheet 16 of 27

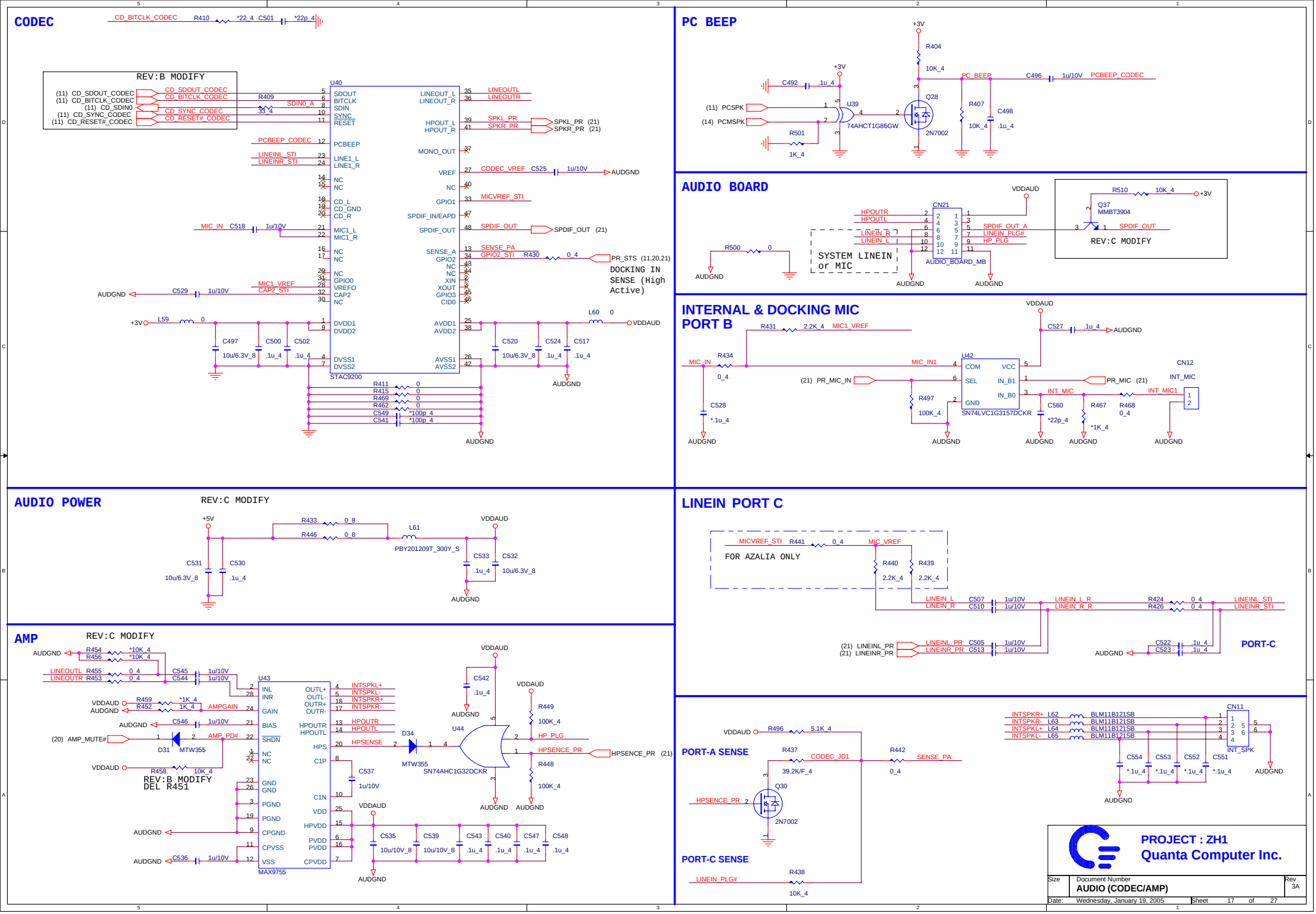
CODEC
REV:B MODIFY
U40
STAC9200
PC BEEP
U39
74AHCT1G86GW
Q28
2N7002
AUDIO BOARD
CN21
AUDIO_BOARD_MB
Q37
MMBT3904
REV:C MODIFY
SYSTEM LINEIN or MIC
INTERNAL & DOCKING MIC PORT B
U42
SN74LVC1G3157DCKR
CN12
INT_MIC
AUDIO POWER
REV:C MODIFY
LINEIN PORT C
FOR AZALIA ONLY
PORT-C
AMP
REV:C MODIFY
U43
MAX9755
REV:B MODIFY
DEL R451
U44
SN74AHC1G32DCKR
PORT-A SENSE
PORT-C SENSE
Q30
2N7002
CN11
INT_SPK
PROJECT : ZH1
Quanta Computer Inc.
Size
Document Number
AUDIO (CODEC/AMP)
Rev
3A
Date: Wednesday, January 19, 2005
Sheet 17 of 27

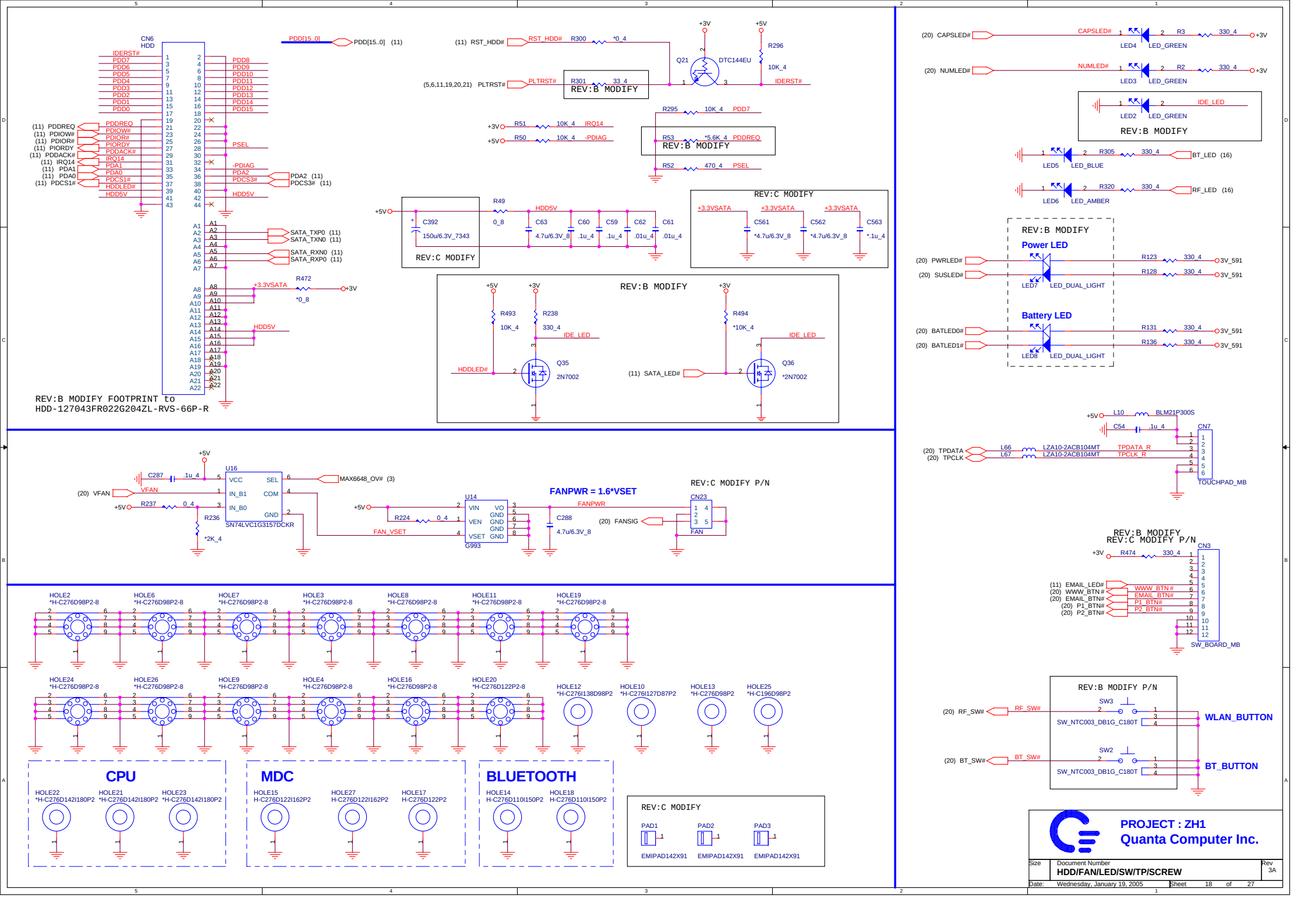
CN6
HDD
IDERST#
PDD7
PDD6
PDD5
PDD4
PDD3
PDD2
PDD1
PDD0
PDD8
PDD9
PDD10
PDD11
PDD12
PDD13
PDD14
PDD15
PDD[15..0]
PDD[15..0] (11)
(11) PDDREQ
(11) PDIOW#
(11) PDIOR#
(11) PIORDY
(11) PDDACK#
(11) IRQ14
(11) PDA1
(11) PDA0
(11) PDCS1#
PDDREQ
PDIOW#
PDIOR#
PIORDY
PDDACK#
IRQ14
PDA1
PDA0
PDCS1#
HDDLED#
HDD5V
PSEL
-PDIAG
PDA2
PDCS3#
PDA2 (11)
PDCS3# (11)
HDD5V
SATA_TXP0 (11)
SATA_TXN0 (11)
SATA_RXN0 (11)
SATA_RXP0 (11)
+3.3VSATA
R472
*0_8
+3V
HDD5V
REV:B MODIFY FOOTPRINT to
HDD-127043FR022G204ZL-RVS-66P-R
(11) RST_HDD#
RST_HDD#
R300
*0_4
(5,6,11,19,20,21) PLTRST#
PLTRST#
R301
33_4
REV:B MODIFY
+3V
+5V
Q21
DTC144EU
R296
10K_4
IDERST#
+3V
R51
10K_4
IRQ14
+5V
R50
10K_4
-PDIAG
R295
10K_4
PDD7
R53
*5.6K_4
PDDREQ
REV:B MODIFY
R52
470_4
PSEL
+5V
C392
150u/6.3V_7343
REV:C MODIFY
R49
0_8
HDD5V
C63
4.7u/6.3V_8
C60
.1u_4
C59
.1u_4
C62
.01u_4
C61
.01u_4
REV:C MODIFY
+3.3VSATA
C561
*4.7u/6.3V_8
C562
*4.7u/6.3V_8
C563
*.1u_4
REV:B MODIFY
+5V
+3V
R493
10K_4
R238
330_4
IDE_LED
HDDLED#
Q35
2N7002
+3V
R494
*10K_4
IDE_LED
(11) SATA_LED#
Q36
*2N7002
(20) CAPSLED#
CAPSLED#
LED4
LED_GREEN
R3
330_4
+3V
(20) NUMLED#
NUMLED#
LED3
LED_GREEN
R2
330_4
+3V
LED2
LED_GREEN
IDE_LED
REV:B MODIFY
LED5
LED_BLUE
R305
330_4
BT_LED (16)
LED6
LED_AMBER
R320
330_4
RF_LED (16)
REV:B MODIFY
Power LED
(20) PWRLED#
(20) SUSLED#
LED7
LED_DUAL_LIGHT
R123
330_4
R128
330_4
3V_591
Battery LED
(20) BATLED0#
(20) BATLED1#
LED8
LED_DUAL_LIGHT
R131
330_4
R136
330_4
3V_591
+5V
L10
BLM21P300S
C54
.1u_4
CN7
(20) TPDATA
(20) TPCLK
L66
L67
LZA10-2ACB104MT
LZA10-2ACB104MT
TPDATA_R
TPCLK_R
TOUCHPAD_MB
REV:B MODIFY
REV:C MODIFY P/N
+3V
R474
330_4
CN3
(11) EMAIL_LED#
(20) WWW_BTN#
(20) EMAIL_BTN#
(20) P1_BTN#
(20) P2_BTN#
WWW_BTN#
EMAIL_BTN#
P1_BTN#
P2_BTN#
SW_BOARD_MB
+5V
C287
.1u_4
U16
VCC
SEL
IN_B1
COM
IN_B0
GND
SN74LVC1G3157DCKR
MAX6648_OV# (3)
(20) VFAN
VFAN
+5V
R237
0_4
R236
*2K_4
+5V
R224
0_4
FAN_VSET
U14
VIN
VO
VEN
VSET
GND
G993
FANPWR = 1.6*VSET
FANPWR
C288
4.7u/6.3V_8
(20) FANSIG
REV:C MODIFY P/N
CN23
FAN
HOLE2
*H-C276D98P2-8
HOLE6
*H-C276D98P2-8
HOLE7
*H-C276D98P2-8
HOLE3
*H-C276D98P2-8
HOLE8
*H-C276D98P2-8
HOLE11
*H-C276D98P2-8
HOLE19
*H-C276D98P2-8
HOLE24
*H-C276D98P2-8
HOLE26
*H-C276D98P2-8
HOLE9
*H-C276D98P2-8
HOLE4
*H-C276D98P2-8
HOLE16
*H-C276D98P2-8
HOLE20
*H-C276D122P2-8
HOLE12
*H-C276I138D98P2
HOLE10
*H-C276I127D87P2
HOLE13
*H-C276D98P2
HOLE25
*H-C196D98P2
CPU
HOLE22
*H-C276D142I180P2
HOLE21
*H-C276D142I180P2
HOLE23
*H-C276D142I180P2
MDC
HOLE15
H-C276D122I162P2
HOLE27
H-C276D122I162P2
HOLE17
H-C276D122P2
BLUETOOTH
HOLE14
H-C276D110I150P2
HOLE18
H-C276D110I150P2
REV:C MODIFY
PAD1
PAD2
PAD3
EMIPAD142X91
EMIPAD142X91
EMIPAD142X91
REV:B MODIFY P/N
(20) RF_SW#
RF_SW#
SW3
SW_NTC003_DB1G_C180T
WLAN_BUTTON
(20) BT_SW#
BT_SW#
SW2
SW_NTC003_DB1G_C180T
BT_BUTTON
PROJECT : ZH1
Quanta Computer Inc.
Size
Document Number
HDD/FAN/LED/SW/TP/SCREW
Rev
3A
Date: Wednesday, January 19, 2005
Sheet 18 of 27

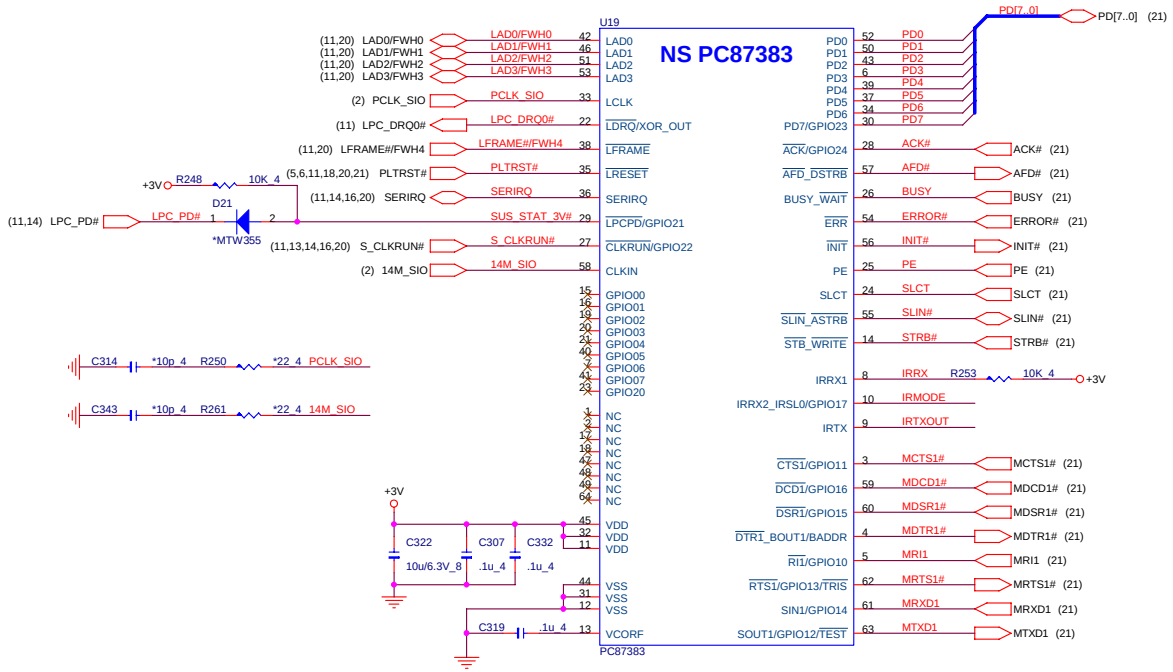

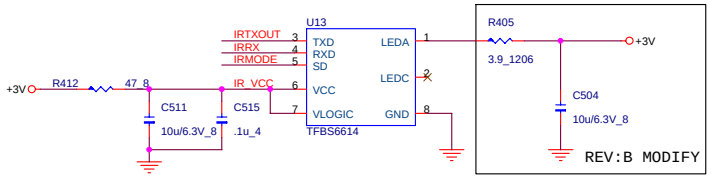

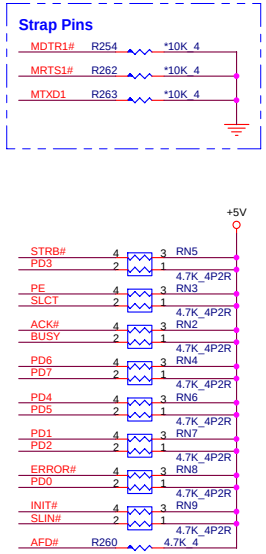

PROJECT : ZH1
Quanta Computer Inc.

Size	Document Number	Rev
	SIO PC87383	2A

Date: Wednesday, January 19, 2005 Sheet 19 of 27

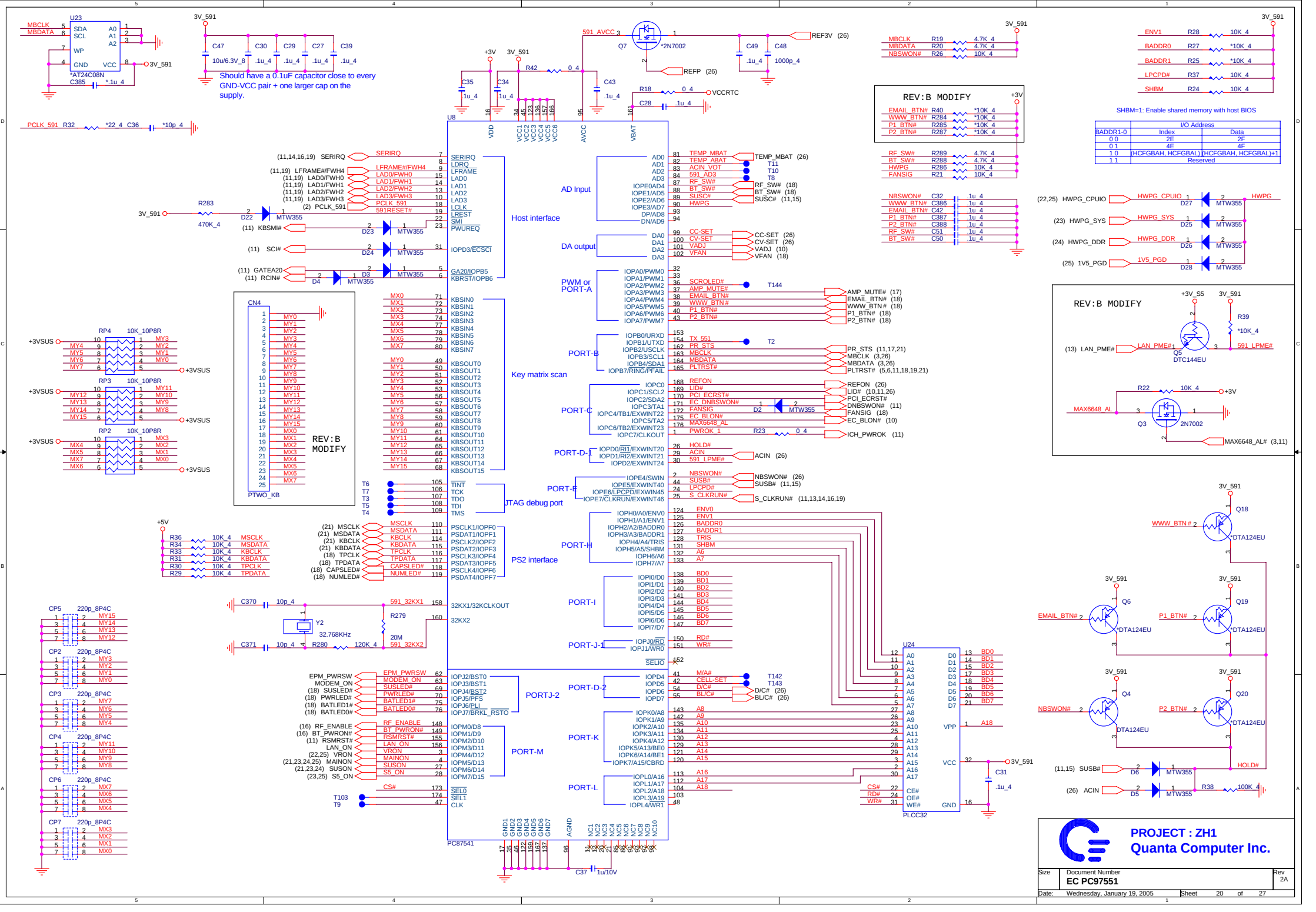
U23
MBCLK
MBDATA
SDA
SCL
WP
GND
VCC
A0
A1
A2
*AT24C08N
C385 *.1u_4
3V_591
C47 10u/6.3V_8
C30 .1u_4
C29 .1u_4
C27 .1u_4
C39 .1u_4
Should have a 0.1uF capacitor close to every GND-VCC pair + one larger cap on the supply.
PCLK_591 R32 *22_4 C36 *10p_4
591_AVCC
Q7 *2N7002
REF3V (26)
REFP (26)
C49 .1u_4
C48 1000p_4
+3V
R42 0_4
C35 1u_4
C34 1u_4
C43 .1u_4
R18 0_4
VCCRTC
C28 .1u_4
U8
VDD
VCC1 VCC2 VCC3 VCC4 VCC5 VCC6
AVCC
VBAT
SERIRQ
LDRQ
LFRAME
LAD0
LAD1
LAD2
LAD3
LCLK
LRESET
SMI
PWUREQ
IOPD3/ECSCI
GA20/IOPB5
KBRST/IOPB6
Host interface
AD0 AD1 AD2 AD3
IOPE0AD4
IOPE1AD5
IOPE2AD6
IOPE3AD7
DP/AD8
DN/AD9
TEMP_MBAT
TEMP_ABAT
ACIN_VOT
591_AD3
RF_SW#
BT_SW#
SUSC#
HWPG
AD Input
DA0 DA1 DA2 DA3
CC-SET
CV-SET
VADJ
VFAN
DA output
IOPA0/PWM0
IOPA1/PWM1
IOPA2/PWM2
IOPA3/PWM3
IOPA4/PWM4
IOPA5/PWM5
IOPA6/PWM6
IOPA7/PWM7
SCROLED#
AMP_MUTE#
EMAIL_BTN#
WWW_BTN#
P1_BTN#
P2_BTN#
PWM or PORT-A
IOPB0/URXD
IOPB1/UTXD
IOPB2/USCLK
IOPB3/SCL1
IOPB4/SDA1
IOPB7/RING/PFAIL
TX_551
PR_STS
MBCLK
MBDATA
PLTRST#
PORT-B
IOPC0
IOPC1/SCL2
IOPC2/SDA2
IOPC3/TA1
IOPC4/TB1/EXWINT22
IOPC5/TA2
IOPC6/TB2/EXWINT23
IOPC7/CLKOUT
REFON
LID#
PCI_ECRST#
EC_DNBSWON#
FANSIG
EC_BLON#
MAX6648_AL
PWROK_1
PORT-C
IOPD0/RI1/EXWINT20
IOPD1/RI2/EXWINT21
IOPD2/EXWINT24
HOLD#
ACIN
591_LPME#
PORT-D-1
IOPE4/SWIN
IOPE5/EXWINT40
IOPE6/LPCPD/EXWIN45
IOPE7/CLKRUN/EXWINT46
NBSWON#
SUSB#
LPCPD#
S_CLKRUN#
PORT-E
IOPH0/A0/ENV0
IOPH1/A1/ENV1
IOPH2/A2/BADDR0
IOPH3/A3/BADDR1
IOPH4/A4/TRIS
IOPH5/A5/SHBM
IOPH6/A6
IOPH7/A7
ENV0
ENV1
BADDR0
BADDR1
TRIS
SHBM
A6
A7
PORT-H
IOPI0/D0
IOPI1/D1
IOPI2/D2
IOPI3/D3
IOPI4/D4
IOPI5/D5
IOPI6/D6
IOPI7/D7
BD0
BD1
BD2
BD3
BD4
BD5
BD6
BD7
PORT-I
IOPJ0/RD
IOPJ1/WR0
RD#
WR#
PORT-J-1
SELIO
IOPD4
IOPD5
IOPD6
IOPD7
M/A#
CELL-SET
D/C#
BLC#
PORT-D-2
IOPK0/A8
IOPK1/A9
IOPK2/A10
IOPK3/A11
IOPK4/A12
IOPK5/A13/BE0
IOPK6/A14/BE1
IOPK7/A15/CBRD
A8
A9
A10
A11
A12
A13
A14
A15
PORT-K
IOPL0/A16
IOPL1/A17
IOPL2/A18
IOPL3/A19
IOPL4/WR1
A16
A17
A18
PORT-L
CS#
SEL0
SEL1
CLK
T11
T10
T8
T144
T2
T143
T142
CN4
PTWO_KB
MY0 MY1 MY2 MY3 MY4 MY5 MY6 MY7 MY8 MY9 MY10 MY11 MY12 MY13 MY14 MY15
MX0 MX1 MX2 MX3 MX4 MX5 MX6 MX7
KBSIN0 KBSIN1 KBSIN2 KBSIN3 KBSIN4 KBSIN5 KBSIN6 KBSIN7
KBSOUT0 KBSOUT1 KBSOUT2 KBSOUT3 KBSOUT4 KBSOUT5 KBSOUT6 KBSOUT7 KBSOUT8 KBSOUT9 KBSOUT10 KBSOUT11 KBSOUT12 KBSOUT13 KBSOUT14 KBSOUT15
Key matrix scan
TINT
TCK
TDO
TDI
TMS
JTAG debug port
PSCLK1/IOPF0
PSDAT1/IOPF1
PSCLK2/IOPF2
PSDAT2/IOPF3
PSCLK3/IOPF4
PSDAT3/IOPF5
PSCLK4/IOPF6
PSDAT4/IOPF7
MSCLK
MSDATA
KBCLK
KBDATA
TPCLK
TPDATA
CAPSLED#
NUMLED#
PS2 interface
591_32KX1
32KX1/32KCLKOUT
32KX2
591_32KX2
C370 10p_4
C371 10p_4
Y2 32.768KHz
R279 20M
R280 120K_4
IOPJ2/BST0
IOPJ3/BST1
IOPJ4/BST2
IOPJ5/PFS
IOPJ6/PLI
IOPJ7/BRKL_RSTO
EPM_PWRSW
MODEM_ON
SUSLED#
PWRLED#
BATLED1#
BATLED0#
PORTJ-2
IOPM0/D8
IOPM1/D9
IOPM2/D10
IOPM3/D11
IOPM4/D12
IOPM5/D13
IOPM6/D14
IOPM7/D15
RF_ENABLE
BT_PWRON#
RSMRST#
LAN_ON
VRON
MAINON
SUSON
S5_ON
PORT-M
PC87541
GND1 GND2 GND3 GND4 GND5 GND6 GND7
AGND
NC1 NC2 NC3 NC4 NC5 NC6 NC7 NC8 NC9 NC10
C37 1u/10V
REV:B MODIFY
EMAIL_BTN# R40 *10K_4
WWW_BTN# R284 *10K_4
P1_BTN# R285 *10K_4
P2_BTN# R287 *10K_4
MBCLK R19 4.7K_4
MBDATA R20 4.7K_4
NBSWON# R26 10K_4
RF_SW# R289 4.7K_4
BT_SW# R288 4.7K_4
HWPG R286 10K_4
FANSIG R21 10K_4
NBSWON# C32 .1u_4
WWW_BTN# C386 .1u_4
EMAIL_BTN# C42 .1u_4
P1_BTN# C387 .1u_4
P2_BTN# C388 .1u_4
RF_SW# C51 .1u_4
BT_SW# C50 .1u_4
ENV1 R28 10K_4
BADDR0 R27 *10K_4
BADDR1 R25 *10K_4
LPCPD# R37 10K_4
SHBM R24 10K_4
SHBM=1: Enable shared memory with host BIOS
I/O Address
BADDR1-0 Index Data
0 0 2E 2F
0 1 4E 4F
1 0 (HCFGBAH, HCFGBAL) (HCFGBAH, HCFGBAL)+1
1 1 Reserved
HWPG_CPUIO D27 MTW355
HWPG_SYS D25 MTW355
HWPG_DDR D26 MTW355
1V5_PGD D28 MTW355
HWPG
REV:B MODIFY
+3V_S5
R39 *10K_4
LAN_PME# Q5 DTC144EU
591_LPME#
R22 10K_4
MAX6648_AL Q3 2N7002
MAX6648_AL# (3,11)
Q18 *DTA124EU
WWW_BTN#
Q6 *DTA124EU
EMAIL_BTN#
Q19 *DTA124EU
P1_BTN#
Q4 DTA124EU
NBSWON#
Q20 *DTA124EU
P2_BTN#
D6 MTW355
D5 MTW355
R38 100K_4
HOLD#
U24
PLCC32
VPP
VCC
GND
CE#
OE#
WE#
C31 .1u_4
CP5 CP2 CP3 CP4 CP6 CP7
220p_8P4C
R36 R34 R33 R31 R30 R29 10K_4
R283 470K_4
D22 D23 D24 D3 D4 MTW355
RP4 RP3 RP2 10K_10P8R
+3VSUS
+5V
+3V_591
PROJECT : ZH1
Quanta Computer Inc.
Size
Document Number
EC PC97551
Rev 2A
Date: Wednesday, January 19, 2005
Sheet 20 of 27

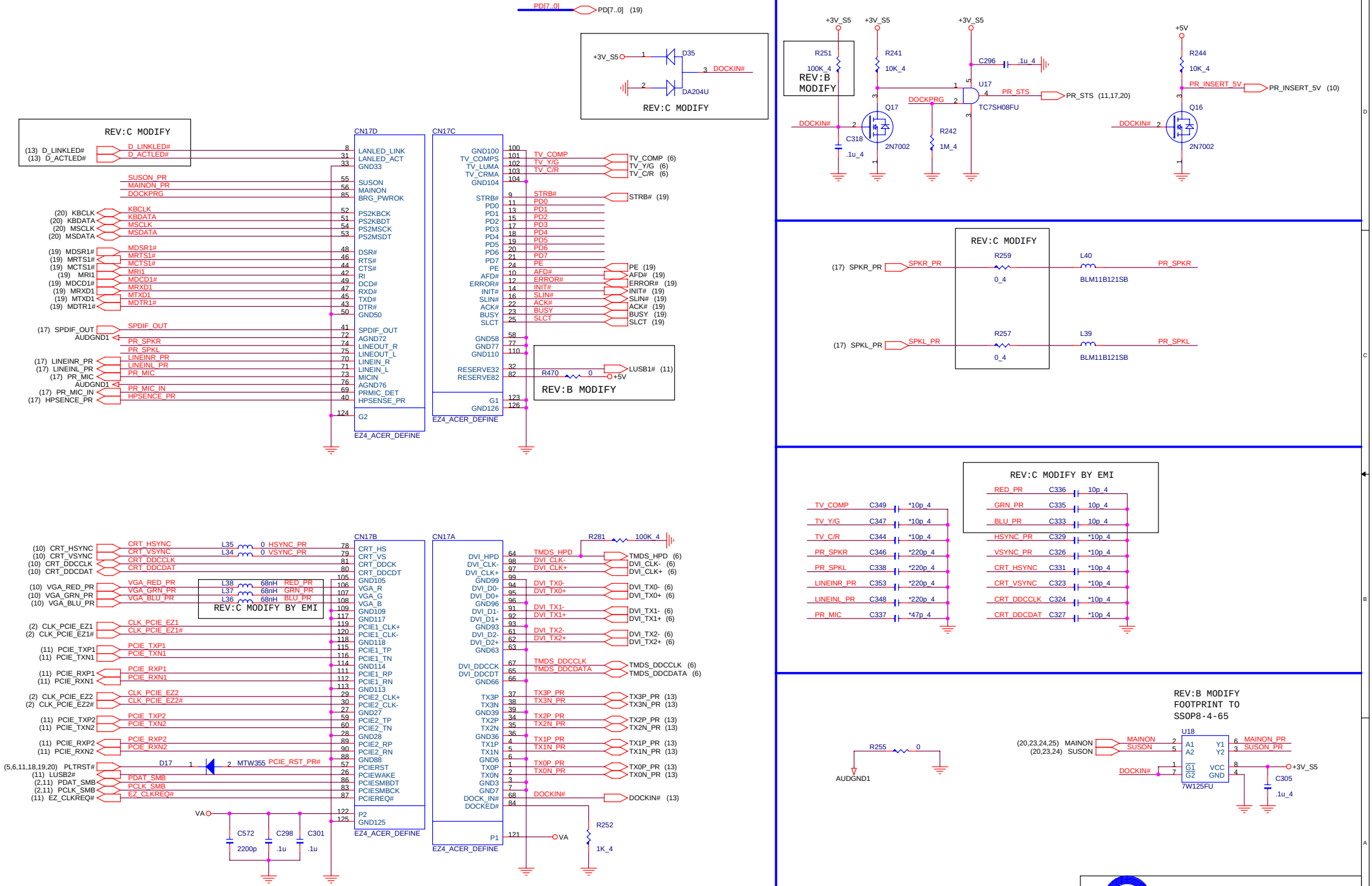

PROJECT : ZH1
Quanta Computer Inc.

Size	Document Number	Rev
	EZ PORT4	3A

Date: Wednesday, January 19, 2005 Sheet 21 of 27

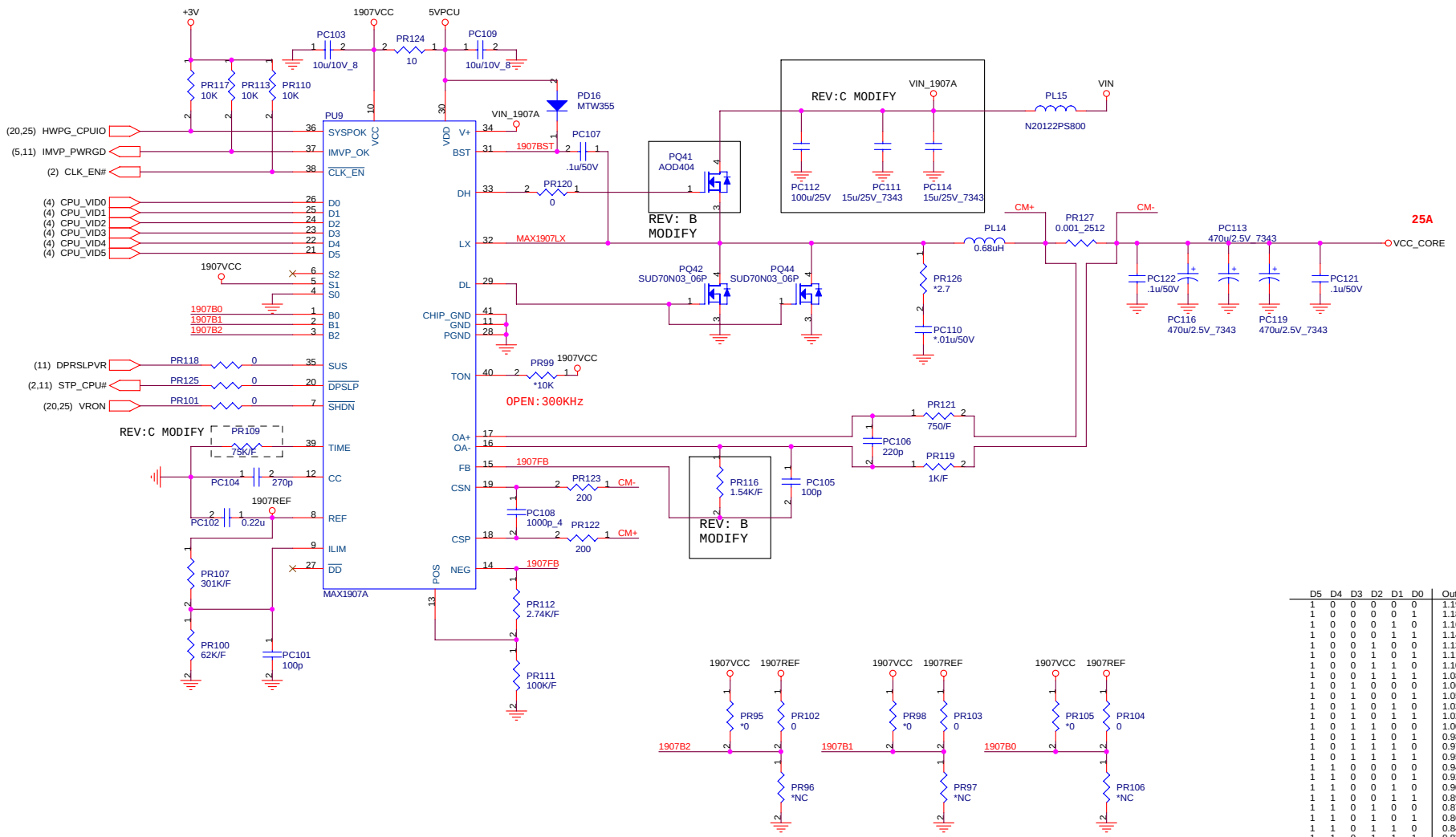

D5	D4	D3	D2	D1	D0	Output	D5	D4	D3	D2	D1	D0	Output
1	0	0	0	0	0	1.196V	0	0	0	0	0	0	1.708V
1	0	0	0	0	1	1.180V	0	0	0	0	0	1	1.692V
1	0	0	0	1	0	1.164V	0	0	0	0	1	0	1.676V
1	0	0	0	1	1	1.148V	0	0	0	0	1	1	1.660V
1	0	0	1	0	0	1.132V	0	0	0	1	0	0	1.644V
1	0	0	1	0	1	1.116V	0	0	0	1	0	1	1.628V
1	0	0	1	1	0	1.100V	0	0	0	1	1	0	1.612V
1	0	0	1	1	1	1.084V	0	0	0	1	1	1	1.596V
1	0	1	0	0	0	1.068V	0	0	1	0	0	0	1.580V
1	0	1	0	0	1	1.052V	0	0	1	0	0	1	1.564V
1	0	1	0	1	0	1.036V	0	0	1	0	1	0	1.548V
1	0	1	0	1	1	1.020V	0	0	1	0	1	1	1.532V
1	0	1	1	0	0	1.004V	0	0	1	1	0	0	1.516V
1	0	1	1	0	1	0.988V	0	0	1	1	0	1	1.500V
1	0	1	1	1	0	0.972V	0	0	1	1	1	0	1.484V
1	0	1	1	1	1	0.956V	0	0	1	1	1	1	1.468V
1	1	0	0	0	0	0.940V	0	1	0	0	0	0	1.452V
1	1	0	0	0	1	0.924V	0	1	0	0	0	1	1.436V
1	1	0	0	1	0	0.908V	0	1	0	0	1	0	1.420V
1	1	0	0	1	1	0.892V	0	1	0	0	1	1	1.404V
1	1	0	1	0	0	0.876V	0	1	0	1	0	0	1.388V
1	1	0	1	0	1	0.860V	0	1	0	1	0	1	1.372V
1	1	0	1	1	0	0.844V	0	1	0	1	1	0	1.356V
1	1	0	1	1	1	0.828V	0	1	0	1	1	1	1.340V
1	1	1	0	0	0	0.812V	0	1	1	0	0	0	1.324V
1	1	1	0	0	1	0.796V	0	1	1	0	0	1	1.308V
1	1	1	0	1	0	0.780V	0	1	1	0	1	0	1.292V
1	1	1	0	1	1	0.764V	0	1	1	0	1	1	1.276V
1	1	1	1	0	0	0.748V	0	1	1	1	0	0	1.260V
1	1	1	1	0	1	0.732V	0	1	1	1	0	1	1.244V
1	1	1	1	1	0	0.716V	0	1	1	1	1	0	1.228V
1	1	1	1	1	1	0.700V	0	1	1	1	1	1	1.212V

SUSPEND MODE (SUS=HIGH)

S2	S1	S0	Output
OPEN	VCC	GND	0.748V

VCC_BOOT

B2	B1	B0	Output
GND	GND	GND	1.708V
REF	REF	REF	1.372V
OPEN	OPEN	OPEN	1.036V
VCC	VCC	VCC	0.700V
REF	VCC	VCC	1.212V

PROJECT : ZH1
Quanta Computer Inc.

Size	Document Number	Rev
	CPU CORE (MAX1907)	3A

Date: Wednesday, January 19, 2005 Sheet 22 of 27

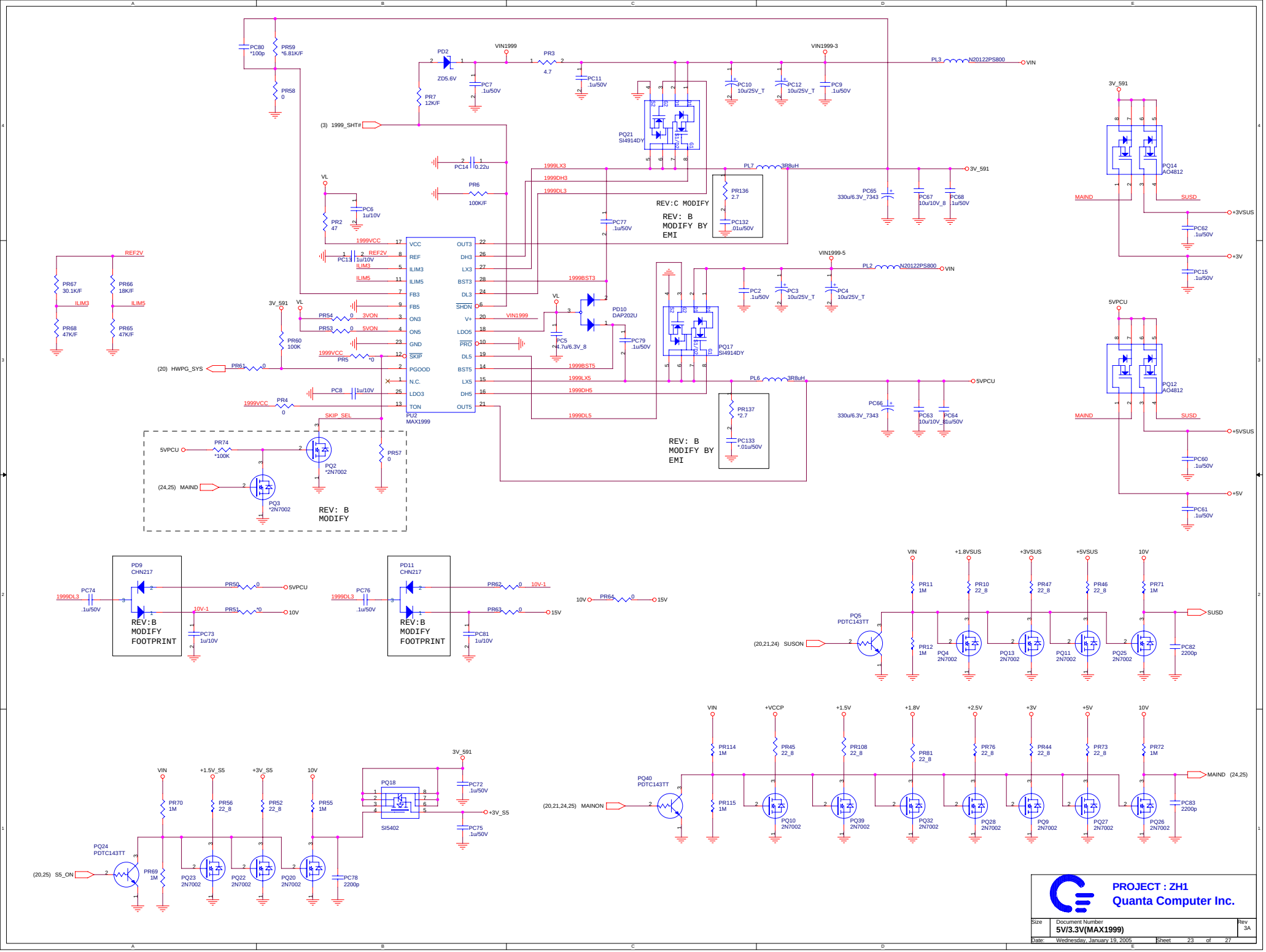
PU2
MAX1999
VCC
REF
ILIM3
ILIM5
FB3
FB5
ON3
ON5
GND
SKIP
PGOOD
N.C.
LDO3
TON
OUT3
DH3
LX3
BST3
DL3
SHDN
V+
LDO5
PRO
DL5
BST5
LX5
DH5
OUT5
REV:C MODIFY
REV: B MODIFY BY EMI
REV: B MODIFY
REV:B MODIFY FOOTPRINT
PROJECT : ZH1
Quanta Computer Inc.
Size
Document Number
5V/3.3V(MAX1999)
Rev 3A
Date: Wednesday, January 19, 2005
Sheet 23 of 27

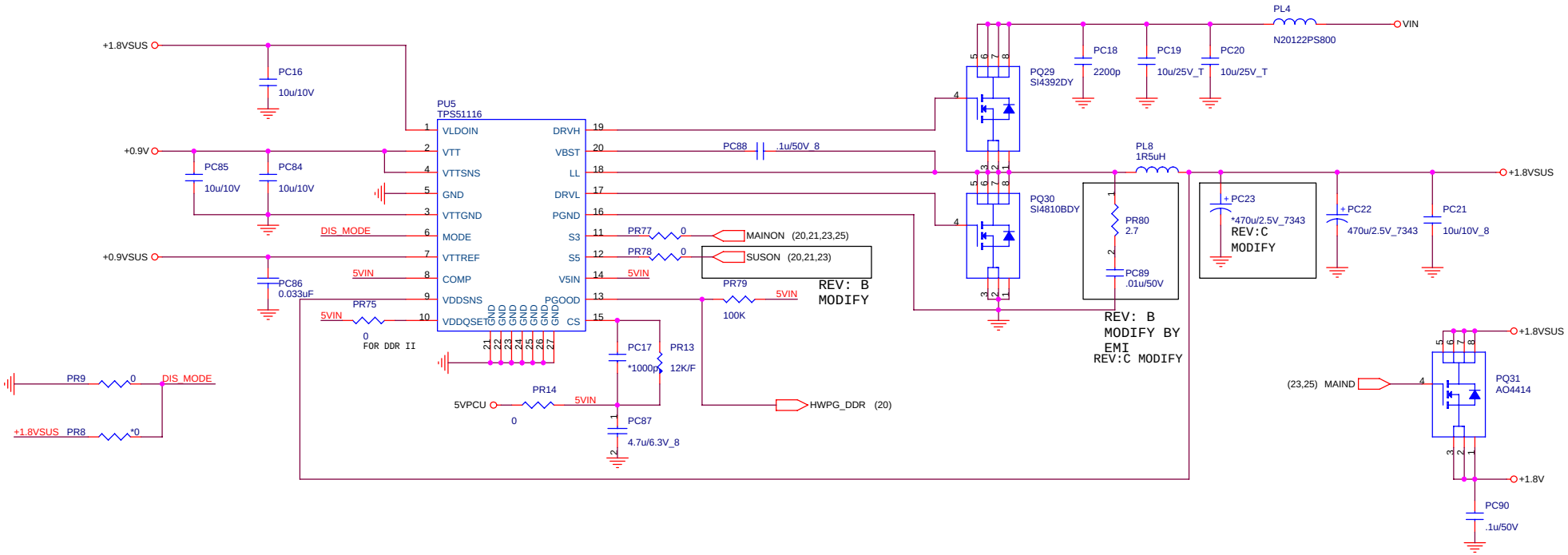

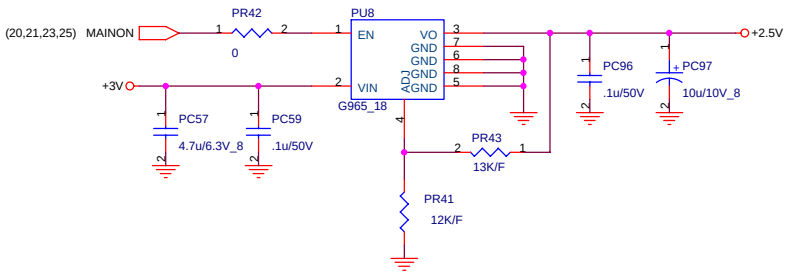

PROJECT : ZH1
Quanta Computer Inc.

Size	Document Number	Rev
	2.5VSUS / 1.25VTERM	3A

Date: Wednesday, January 19, 2005 Sheet 24 of 27

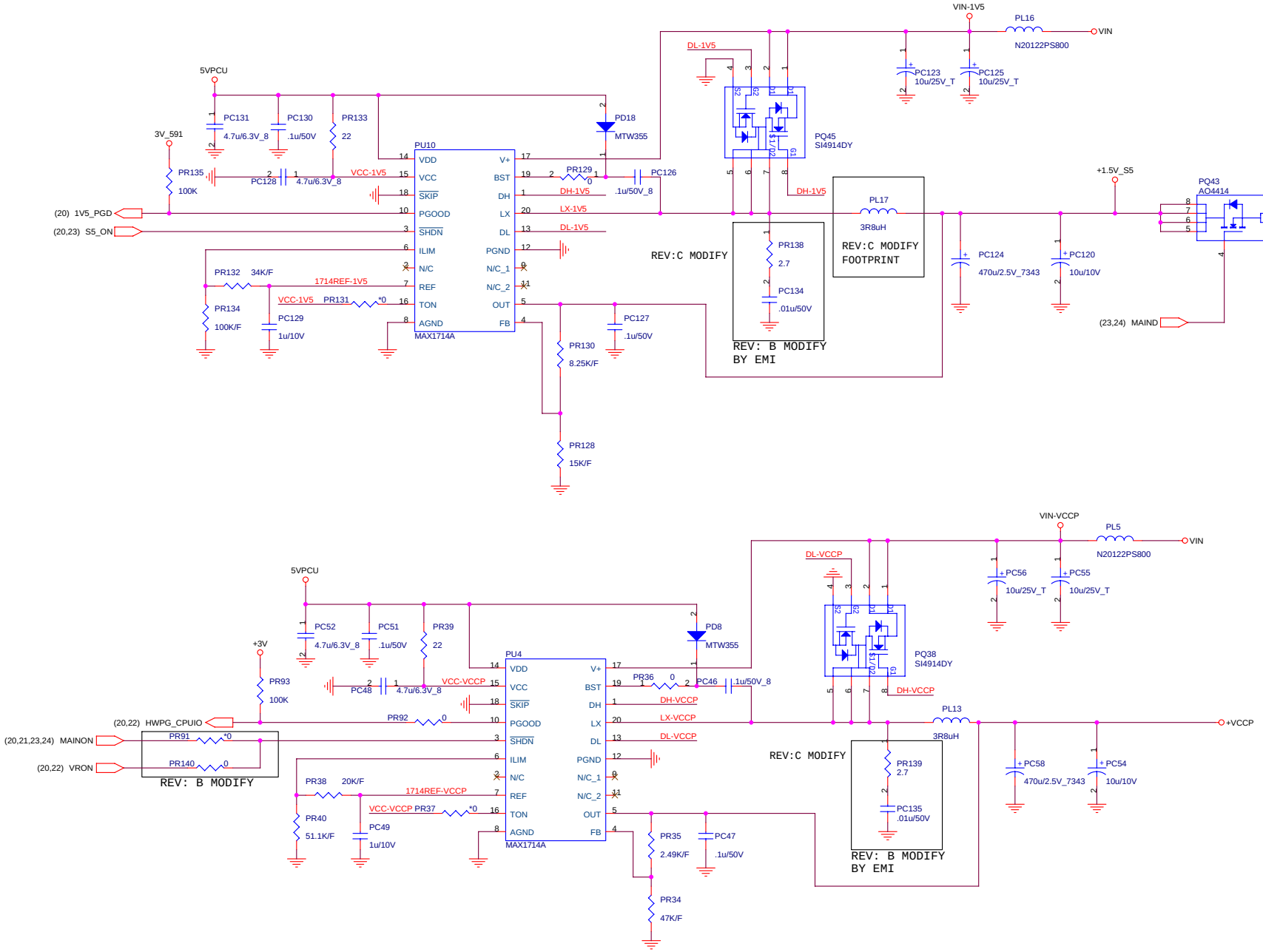

PROJECT : ZH1
Quanta Computer Inc.

Size	Document Number	Rev
	+1.5V / +VCCP	3A

Date: Wednesday, January 19, 2005 Sheet 25 of 27

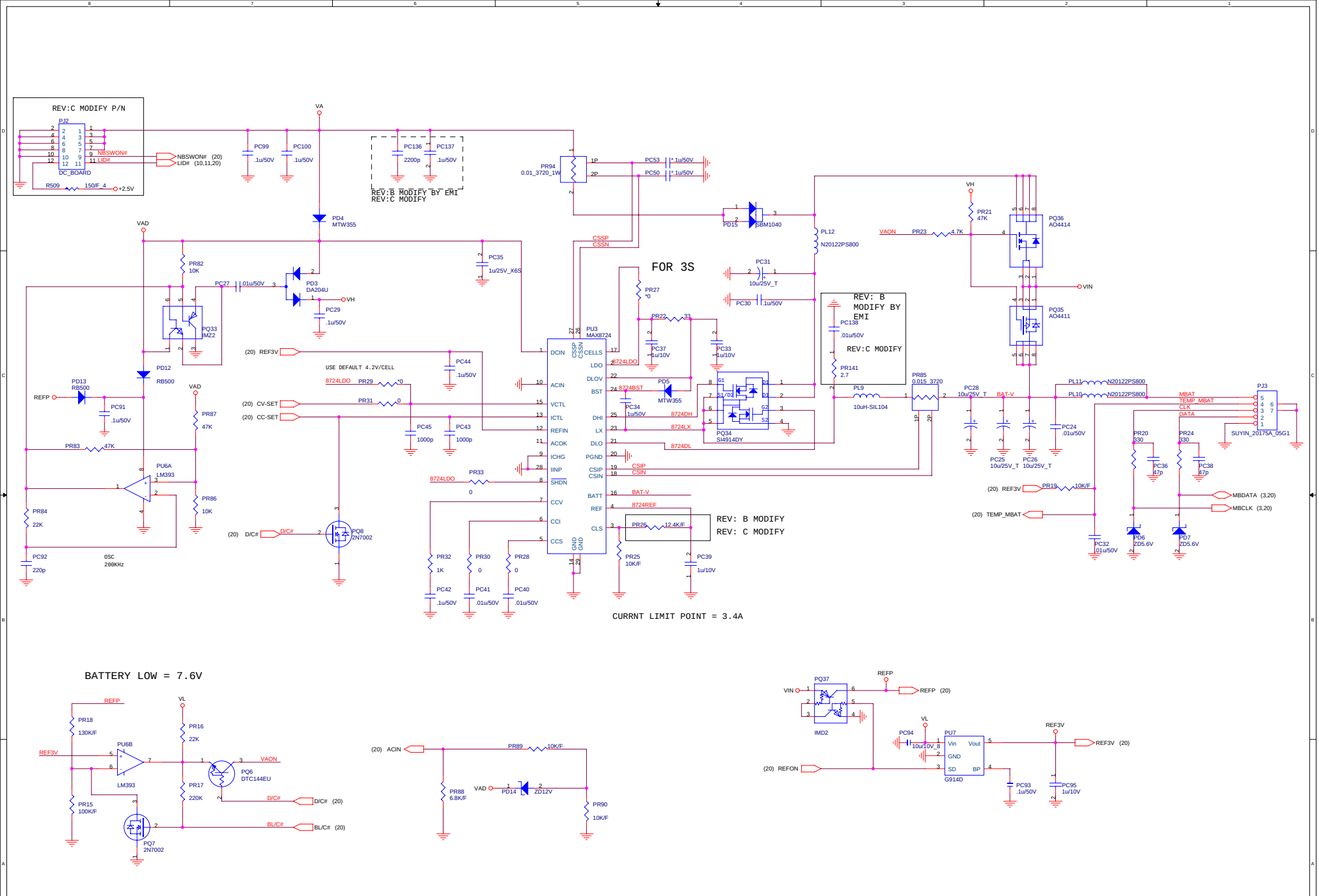

PROJECT : ZH1
Quanta Computer Inc.

Size	Document Number	Rev
	BATTERY CHARGER	3A

Date: Wednesday, January 19, 2005 Sheet 26 of 27